Know what's below. Call before you dig.

Hoffman Falls Wind Project

Madison County, New York

Electrical Construction Plans

REGIONAL MAP

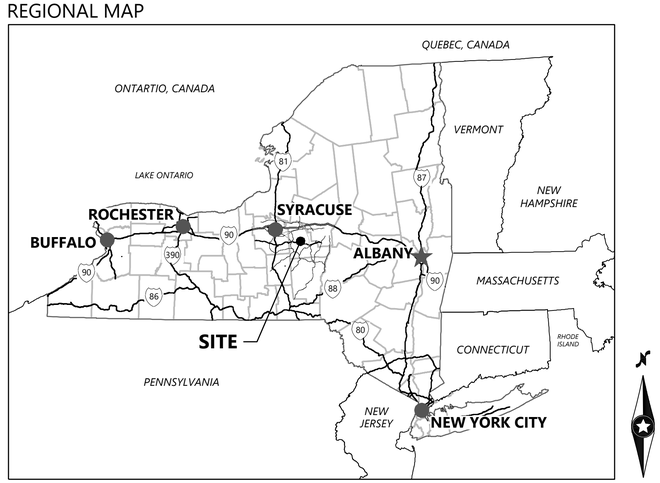

VICINITY MAP

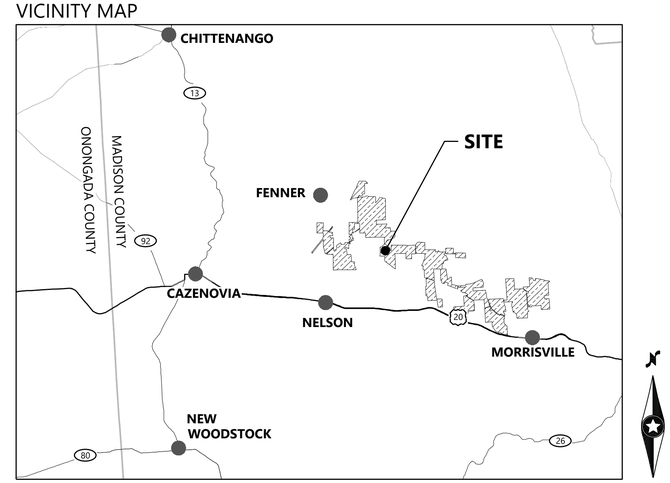

DATA SET INFORMATION			
Coordinate System	New York Central NSRS11 (2011) SPCS US FEET		
BASE FILE	**FILE NAME / NOTES**	**PROVIDER**	**DATE**
AERIAL IMAGE	2023-06-13 Aerial Box	WESTWOOD	6/13/2023
LAND CONTROL	Facility Site Parcels	LIBERTY	11/29/2023
BOUNDARY SURVEY	0042618.01V-SURV	WESTWOOD	12/4/2023
TOPOGRAPHY	0042618V-DTM - 10m Public Data Placeholder	WESTWOOD	5/16/2023
TURBINE ARRAY	2023-08-23_Wind Turbine	LIBERTY	8/15/2023
UNDERGROUND COLLECTION	0042618E-WIRE	WESTWOOD	12/13/2023
GEN-TIE	*	*	*
STREAMS/WETLANDS	Delineated Wetland and Stream	EDR	1/22/2024
CULTURAL RESOURCES	2024-01-19_Hoffman Falls Ecological Data	EDR	1/19/2024
FEMA INFORMATION	FEMA Mapped Flood Hazard Area	EDR	12/11/2023
GEOTECHNICAL REPORT	Preliminary Geotechnical Investigation Report	Westwood	10/3/2023

CONTACT INFORMATION				
NAME	COMPANY NAME	PROJECT ROLE	EMAIL	PHONE
MEG LEE	LIBERTY RENEWABLES INC.	CLIENT PROJECT MANAGER	MLEE@LIBERTY-RENEWABLES.COM	(860) 575-0680
GUSTAV HEIDEN	WESTWOOD SURVEYING & ENGINEERING, LLC	ELECTRICAL ENGINEERING LEAD	GUSTAV.HEIDEN@WESTWOODPS.COM	(608) 821-3625
DREW SZABO	WESTWOOD SURVEYING & ENGINEERING, LLC	ELECTRICAL ENGINEER OF RECORD	DREW.SZABO@WESTWOODPS.COM	(608) 662-5345
DANIEL ZVIRZDIN	EDR	ENVIRONMENTAL PROJECT MANAGER	DZVIRZDIN@EDRDPC.COM	

Westwood Surveying & Engineering

Phone (952) 937-5150
Fax (952) 937-5822
Toll Free (888) 937-5150

12701 Whitewater Drive, Suite #300
Minnetonka, MN 55343
ww-pc.com

Westwood Surveying and Engineering, P.C.

STATE OF NEW YORK · ANDREW N. SZABO · 099489 · LICENSED PROFESSIONAL ENGINEER

1-26-2024

PREPARED FOR:

Hoffman Falls Wind LLC

90 State Street, Suite 700
Albany, NY 12207

REVISIONS:

#	DATE	COMMENT	BY	CHK	APR
A	09/08/2023	30% ELECTRICAL DESIGN	JON	GVH	DNS
B	01/26/2024	60% ELECTRICAL DESIGN	JON	GVH	DNS

Hoffman Falls Wind Project

Madison County, New York

Cover Sheet

ISSUE FOR PERMIT

DATE: 01/26/2024

SHEET: E0000

REV: B

Sheet List Table

Sheet Number	Sheet Title
E0000	Cover Sheet
E0001	Sheet Index
E0010	Electrical Notes
E0020	Symbology & Abbreviations
E1000	Overall MV Site Plan
E1300	MV Circuit Single Line Diagram
E1301	MV Circuit Single Line Diagram
E6000	Overall Communications Site Plan
E6200	Fiber Optic Single Line Diagram
E6400	Met Tower Wiring Diagram
E6401	Fiber Splice Box
E7000	Sectionalizer Cabinet
E7001	Medium Voltage Splice
E7002	Foundation Conduit Details
E7003	Foundation Grounding Details
E7600	Trench Details
E7601	Bore Details
E7700	Crossing Schedule

Westwood Surveying & Engineering

Phone (952) 937-5150
Fax (952) 937-5822
Toll Free (888) 937-5150

12701 Whitewater Drive, Suite #300
Minnetonka, MN 55343
ww-pc.com

Westwood Surveying and Engineering, P.C.

STATE OF NEW YORK · ANDREW N. SZABO · 099489 · LICENSED PROFESSIONAL ENGINEER

1-26-2024

PREPARED FOR:

Hoffman Falls Wind LLC

90 State Street, Suite 700
Albany, NY 12207

REVISIONS:

#	DATE	COMMENT	BY	CHK	APR
A	09/08/2023	30% ELECTRICAL DESIGN	JON	GVH	DNS
B	01/26/2024	60% ELECTRICAL DESIGN	JON	GVH	DNS

Hoffman Falls Wind Project

Madison County, New York

Sheet Index

ISSUE FOR PERMIT

DATE: 01/26/2024

SHEET: E0001 REV: B

SECTION 1 - GENERAL PROVISIONS - ELECTRICAL

A. The work in these design plans shall consist of furnishing labor and materials necessary for the complete installation of power and wind systems shown on the drawings. All work shall be complete and left in operating condition at completion of Contract.

B. Include minor items that are obviously and reasonably necessary to complete the installation and usually included in similar work. Such items include bolts, nuts, anchors, brackets, sleeves, and minor offsets in conduit, junction boxes, etc. because of unforeseen obstructions.

C. Some equipment and materials provided under other design plans may require composite work crews because of trade jurisdiction. It is the Contractor's or Subcontractor's responsibility to review all Contract Documents to determine where these composite crews are required.

D. All temporary and permanent permits and licenses required in these design plans work shall be the responsibility of the Contractor bidding that work.

E. Installation shall meet or exceed current applicable codes, ordinances and regulations in effect at the site. If a Contractor or Subcontractor observes that the Contract Documents are at variance with governing codes and regulations, he shall promptly notify the Engineer in writing, who will respond to such variances in writing. If the Contractor performs work knowing it is not compliant with applicable codes, and does not notify the Engineer, the Contractor shall assume full responsibility and bear all costs attributable to correcting the non-complying work.

F. The reference to Codes and Standards shall not permit a lower grade of construction where Contract Documents call for workmanship and/or materials in excess of those references.

G. Where the terms "provide" or "shall be" are used in the drawings, they shall be taken to mean "The Contractor shall furnish and install".

H. If equipment or materials other than those specified in the design of this project are proposed to be used on this project, the Contractor and supplier shall check it for dimensional differences, electrical requirements and any other potential variances. This comparison shall be made for manufacturers specified as well as those proposed prior to requesting approval. The Contractor shall be responsible for any extra costs incurred as a result of Substitutions, including those of other contractors, such as might be due to (but not limited to) different electrical, mechanical and architectural requirements.

I. Shop Drawings:
   1. Carefully examine all shop drawings noting capacity, arrangement and physical dimensions and mark the drawings as being reviewed and approved prior to submitting to the Engineer. Where catalog data is submitted which includes items which do not apply to this project, those items shall be clearly marked out or relevant items clearly noted. Any deviations from the documents shall be so noted by the Contractor or equipment supplier. The intent and requirements of the drawings and specifications shall be adhered to at all times and are not waived or superseded in any way by the shop drawing submittal or review.
   2. Submit a minimum (1) electronic copy of shop drawings for review and approval. Contractor shall retain a final approved copy for incorporation in the Operation and Maintenance Manuals.
   3. If returned shop drawings are marked "NO EXCEPTIONS TAKEN", no additional submittal is required. If the shop drawing is marked "MAKE CORRECTIONS NOTED", the changes noted on the shop drawings are to be incorporated, with no further resubmittal required. If marked "REVISE AND RESUBMIT", changes noted on the shop drawings are to be made and the drawings resubmitted for review. If marked "REJECTED", the equipment submitted is unacceptable and different equipment or materials need to be submitted.

J. No asbestos or PCB containing materials of any type shall be used on this Project except in cases where acceptable substitutions have not been found for asbestos materials as in high temperature applications.

K. Consult the Contract Drawings and Specifications of all other design plans and other trades for correlating information and layout work so that it will not interfere with other trades. Verify all dimensions and conditions. If conflicts occur such that resolution is not possible by the affected trades on the job, the Engineer shall be notified and a resolution will be worked out.

L. Electrical equipment enclosures (switchboards, panelboards, transformers, relay cabinets, systems racks/cabinets, etc.) shall be vacuumed and wiped clean prior to energizing and again at substantial completion.

M. Install material and equipment in accordance with Manufacturers' recommendations, instructions, and current N.E.C.A. standards.

N. Install equipment and materials to provide required access for servicing and maintenance. Coordinate final equipment location with required access panels and doors. Allow ample space for removal of all parts that require replacement or servicing.

O. Record Drawings: As work progresses, in a neat and legible manner, record all changes or deviations from the contract drawings. Submit Record Drawings to Engineer for review at completion of Work. The Record Drawings will become part of the Operation and Maintenance Manual package submitted to the Owner after the completion of the project.

SECTION 2 - BASIC MATERIALS AND METHODS

A. All materials shall be new, as specified or approved, and in original packaging. Catalog numbers specified shall be verified with vendors prior to ordering material.

B. All materials shall be listed by a NRTL (i.e. UL, ETL, etc.) and have an associated label unless special fabrication of material is required. Special fabricated material shall be fabricated using listed components and procedures.

C. Where the word "provide" is used, it shall require the contractor to furnish and install material complete to a workable system.

D. All work shall be tested in accordance with industry accepted standards. Before testing, a thorough visual inspection shall be made to detect connection problems, damaged components, poor workmanship, inappropriate overcurrent protection, debris, etc. Testing apparatus shall be certified or demonstrated to be accurate within reasonable limits. Competent personnel familiar with the test equipment shall perform all tests. If testing procedures employed are not satisfactory to the Engineer, outside testing will be done at the Contractor's expense.

E. Contractor to identify all electrical equipment with engraved 1/4" white letters on black Norplex-Micarta plates unless noted otherwise noted. Inscriptions shall indicate the name, voltage, phase, wires, feeder size, feeder source and location of source, and the device number.

F. All low voltage cables shall be bundled and labeled as to their function within terminal cabinets, wireways and cable trays.

G. Branch circuitry shall match circuit numbers as shown on the drawings and as scheduled. Any required deviation shall be indicated on the as-built drawings.

H. All opening into equipment shall be sealed with galvanized steel plates or screens to prevent entry of insects and rodents.

SECTION 3 - CONDUIT

A. Conduit:
   1. Conduit Size: As indicated on drawings.
   2. All PVC shall be Schedule 40 where not specifically noted otherwise on drawings.
   3. PVC conduit used above grade shall be UV resistant.
   4. HDPE - As indicated on the drawings. Minimum wall thickness shall be SDR 13.5 unless otherwise noted on drawings.

B. Installation:
   1. Conduit bend radius shall not violate the minimum bending radius of cable.
   2. When non-metallic conduit requires field bending, utilize a hot-bending appliance. Use of torches to bend conduit is unacceptable.
   3. Suitable end caps shall be used during installation of conduit.
   4. Accurate record of all conduit routing shall be documented.
   5. Store and protect products in accordance with manufacturers' instructions, with seals and labels intact and legible.
   6. The interior joint surface shall be smooth to prevent damage to the cables.
   7. Contractor shall seal around all conduits with duct sealant or as required on the drawings.
   8. When cable is pulled into ducts, suitable pulling lubricant shall be used.
   9. All underground raceways shall have proper granular soil around then so as to prevent damage to the raceway.

SECTION 4 - WIRING AND CABLE

A. Approved direct burial cable assembly shall be used only where approved.

B. Use suitable wire pulling lubricant for wiring of 4 AWG and larger.

C. Neatly trim and lace wiring inside boxes, equipment, and panelboards.

D. Clean conductor surfaces before installing lugs and connectors.

E. For aluminum wiring, apply an oxide inhibitor as recommended by the vendor.

F. Make taps and terminations to carry full ampacity of conductors with no perceptible temperature rise.

G. Identification
   1. Control wiring shall be marked at both ends as to its function.
   2. Spare conductors shall be identified as such.

SECTION 5 - MEDIUM VOLTAGE CABLES

I. MV Cables for the system shall be MV-105 Listed single conductor, insulated, shielded and jacketed medium voltage type power cable with 100% insulation level, 105º C. continuous operation rating, 140º C. emergency rating, 250º C. short circuit rating. Allowable neutral temperature during short circuit shall be 350º C.

J. Concentric neutral cables shall have XLPE jackets, as identified in these plans.

K. Cable shall have ASTM B-609 aluminum conductors with Class B stranding in accordance with ASTM B-231, moisture blocked strands, an extruded semi-conducting shield layer (40 mil min.) over the conductor for stress control, direct-burial RHW-2, XLPE insulation and a concentric copper neutral.

L. Cables shall be Manufactured by Okonite, Prysmian, Southwire, General Cable, WTEC, or approved equal.

M. Cable terminations shall be Manufactured by 3M, Raychem/Tyco, Eaton/Cooper, Richards, or approved equal. Non-load break cable terminations shall be for aluminum cable and shall be IEEE 386 compliant.

N. Complete installation shall be per National Electrical Code Articles 310 and 328. Do not exceed manufacturer's published maximum pulling tension or sidewall pressure. Provide sufficient slack in cable, ground and drain wires to permit elbow connectors to be moved to their respective parking stands.

O. All cables shall be labeled at each end at an accessible location for viewing. Label shall indicate circuit, phase, and destination/origination. Labels shall be color coded by phase (black, red, blue) with the circuit and destination/origination written in black letters and secured with a minimum of (2) UV-resistant zip ties.

P. Splices and terminations shall be made by an experienced journeyman who has been trained by the manufacturer in the proper installation of their product. No splices shall be allowed unless specifically noted.

Q. Arrange phases at termination points, A-B-C from left to right or top to bottom as viewed from the front unless otherwise noted.

R. Test all cables according to IEEE Standard 400. Each power cable over 1000V shall be given a continuity and a direct current high potential test or VLF test after installation and after terminations having been made, but before connections have been made to busses or apparatus. All single conductor cables shall be tested between conductors and ground with metallic shield and the other two conductors grounded to the same ground. Each conductor shall be successively tested in the same manner. Direct current voltages shall be applied with negative polarity to the cable conductor.

S. In addition to any testing specified herein, perform testing consistent with the requirements of the applicable codes, NETA Acceptance Testing criteria, and the manufacturers' current quality assurance program.

T. Direct burial wiring to meet spacing requirements as identified in these plans.

U. 100% of existing and new MV collection underground segments shall be VLF testing for all segments.

SECTION 6 - LOW VOLTAGE BOXES

A. Pull and junction boxes shall be code gauge steel, gasketed, painted, galvanized steel, PVC, or fiberglass. Covers shall be secured with screws.

B. Outlet boxes shall be cast malleable iron with threaded hubs or PVC and be of high conductive metal to maintain maximum electric continuity.

C. All outlets shall be equipped with outlet boxes approved for the use.

D. Covers or plates for boxes shall conform substantially to the outlet of the boxes with no projecting edges or corners.

E. Conduit fittings ("LB", "C", "T") or types approved for the location may be employed as required to facilitate pulling in conductors.

F. Provide pull and junction boxes to facilitate pulling or splicing of conductors.

G. Mount boxes to allow for maximum flexibility.

H. Install grounding bushings with bonding conductor on all metallic feeder conduits entering box. Ground bushings and bonding conductors are not required on branch circuit conduits.

SECTION 7 - MEDIUM VOLTAGE SECTIONALIZING CABINETS

A. Sectionalizing cabinets shall be designed for burial with the junction modules or bushings mounted above the ground line. Pedestals shall be in complete conformance with ANSI C57.12.28, Pad-mounted Equipment Enclosure Integrity Standard.

B. Sectionalizing cabinets shall be Manufactured by Nordic, Cooper, Hubbell, G&W, Power Design Inc., Highline, Federal Pacific, Hoffman, S&C, or approved equal.

C. Enlosure shall be 3/16" nominal thickness fire resistant, laminate, fiberglass, with munsell green gel coat finish. Enclosure access doors shall utilize stainless steel hinges and shall have provisions for padlocking. Doors shall have provisions for securing in the open position.

D. Provide junction panels with wells to accommodate the size and quantity of load break or non-load break elbows indicated on drawings.

E. Provide ground bar in unit for bonding of ground conductors and concentric neutrals.

F. Provide fiberglass ground sleeve extending 36" below cabinet installed on a 6" clean gravel base to allow drainage.

G. The parking stand operates together with the stand-off bushing to allow for parking of energized or grounded MV cable.

SECTION 8 - DISCONNECT SWITCHES

A. All disconnect switches shall be NEMA heavy duty Type H.D., horsepower rated, and U.L. listed. Disconnects shall be Eaton, GE, Square D, or Siemens.

B. Provide auxiliary disconnect contacts for control circuits when supplied from an independent source.

C. Switch Interior - All switches shall have switch blades which are fully visible in the off position when the door is open. Switches shall be of dead-front construction with permanently attached arc suppressors hinged or otherwise attached to permit easy access to line-side lugs without removal of the arc suppressor. Lugs shall be UL listed for copper and/or aluminum cables and front removable. All current carrying parts shall be plated by electrolytic processes.

D. Switch Mechanism - Switches shall have a quick-make and quick-break operating handle and mechanism which shall be an integral part of the box, not the cover. Switches shall have a dual cover interlock to prevent unauthorized opening of the switch door in the ON position or closing of the switch mechanism with the door open. Switches shall provisions for locking the switch in both the ON and the OFF positions by padlock.

E. Enclosures shall be NEMA 3R enclosures otherwise specified. Raintight covers shall be securable in the open position. Enclosures shall be code gauge (UL 98) galvanized steel (NEMA 3R). They shall be treated with a rust-inhibiting phosphate and finished in gray baked enamel.

F. Install disconnect switches in an accessible location as convenient as possible to equipment served.

G. Switches shall be rated for the voltage and system type they are used for.

SECTION 9 - GROUNDING

A. Provide complete grounding systems as described herein and as shown on the drawings.

B. All grounding components shall be listed for the purpose they are installed for. Components shall be Manufactured by AMPACT, Burndy, CADWELD, ITT Blackburn, Ilsco, Lyncole, or approved equivalent.

C. Ground rods shall be 5/8 inch diameter by 10 feet long copper clad steel. Connecting cables shall be #3/0 AWG stranded, copper or as indicated on drawings.

D. All metallic conduits, supports, cabinets, non-current carrying parts of equipment, and metallic structures shall be solidly grounded to form a continuous permanent and effective grounded system.

E. All wireways, metal enclosures, cable trays and similar parts of the electrical installation described herein shall be grounded.

F. Low voltage neutrals shall be bonded to the grounding system only at the point of establishing utility service and when establishing a separately derived system such as at the secondary side of transformers or at inverters. MV cable concentric neutrals shall be bonded to the grounding system at all terminations and splice locations.

G. Ground Rods:
   1. Copper-clad steel
   2. 3/4-inch diameter, or as indicated on Drawings.
   3. Length, 10 feet or as indicated on Drawings.

H. Mechanical Connectors to be used for connections with concrete encasement unless otherwise indicated on drawings

I. WTG Grounding Wire
   1. Stranded Copper
   2. Size as indicated on Drawings

J. Trench Ground Wire
   1. Copperclad Steel (40% Conductivity)
   2. Size as indicated on Drawings

K. Verify that final backfill, and compaction has been completed before driving ground rods.

L. Install products in accordance with manufacturer's instructions.

M. Provide bonding to meet regulatory requirements

N. Bare grounding conductors shall be laid slack approximately 18 inches below grade or as otherwise specified in drawings.

O. Ground rods should as much as practical be located as shown on the grounding plan. Each ground rod should be driven in undisturbed earth.

P. Grounding requirements must meet turbine manufacturer's requirements as well as the requirements in the bid and design documents.

Q. After all grounding connections are made, but before connecting the power cables trench ground, resistance readings for the completed foundation ground shall be recorded using the Fall of Potential method. Results shall be conveyed to the Engineer.

R. Refer to MET tower supplier for grounding details.

S. Ground rods shall be equal to their length and shall be laid out in a triangular pattern.

T. All grounding electrode connections shall be exothermic type or irreversible crimp type unless otherwise indicated.

U. Bolted connections to ground bus bars shall be made using a (2) eyelet irreversible crimp connector on the ground conductor. Where two holes are not available on the ground bus bar, a single eyelet irreversible crimp connector can be used.

V. All transformers shall be bonded to the grounding electrode system as well as building steel.

W. Bond all cable tray and equipment racks to ground with a minimum #6 AWG ground conductor.

X. The true resistance to earth of the turbine grounding system shall be tested by the fall of potential method and compared to manufacturer requirements.

Y. Grounding/earthing design per turbine manufacturer documentation .

SECTION 10 - CABLE TERMINATIONS AND SPLICES

A. Cable Splices:
   1. Cold shrink splices shall be designed to meet or exceed IEEE 404 and ANSI C119.
   2. All manufacturer's recommendations and installation procedures shall be explicitly followed.
   3. The contractor shall be proficient with all requirements of the manufacturers splice installation procedures.
   4. Cable splicing shall be completed under weather conditions suitable for this type of work.
   5. The cable circuits shall be grounded at each splice location per installation drawings.
   6. No splices shall be allowed unless specifically noted or approved by Owner.
   7. Splicing of two different cable sizes is not allowed.
   8. Arrange phases at termination points, A-B-C from left to right or top to bottom as viewed from the front unless otherwise noted.
   9. Marker balls and GPS locations at all splices shall also be provided.
   10. All concentric shield wires shall be bonded and grounded at each splice
   11. Ensure splice has a watertight seal.
   12. A protective tent must be erected around the splicing location.
   13. If the temperature at the splicing location is below 40°F a heat source shall be located at the splicing location to heat the protective tent to 45°F

B. Dead Break Elbow, Cable Connector, Accessories, 600 Amp:
   1. At each termination there shall be enough cable for two additional terminations. This shall be accomplished through S-loop outside the equipment or service loops within a vault.
   2. Non-load break cable terminations shall be for aluminum cable and shall be IEEE 386 compliant.
   3. Install cable and accessories in accordance with manufacturer's instructions.
   4. Ground concentric neutrals and drain wires at each termination.
   5. Cable shall be always handled properly to avoid damage, and not be dragged across the ground or sharp projections.
   6. The ends of the cable shall be sealed at all times against moisture with suitable end caps.
   7. Complete installation shall be per National Electrical Code Articles 310 and 328. Do not exceed manufacturer's published maximum pulling tension or sidewall pressure.
   8. Provide sufficient slack in cable, ground and drain wires to permit elbow connectors to be moved to their respective parking stands.
   9. Avoid excessive bending of the cable. The ends of the cable shall be sealed at all times against moisture with suitable end caps. Where it is necessary to cut the cable, the ends shall be terminated or sealed immediately after the cutting operation.
   10. Heating equipment and/or enclosures will be used to maintain the cable, tools and installation materials at a temperature recommended by the manufacturer at all exposed locations, until each particular phase of installation is complete.
   11. Inspect cable for proper connections as shown on drawings.
   12. Inspect shield ground terminals for proper installation.

C. Directional Fault Indicators:
   1. Fault indicators shall be installed on the elbow per manufacturer's instructions. Care shall be taken to route the concentric neutral wires in the proper manner so as to avoid cancellation effects. (i.e. wires shall pass through the fault indicator either not at all, or in both directions).
   2. Install fault indicators in the locations shown on the drawings.

D. Compression Lugs:
   1. For connection of cable to padmounted transformers and low voltage connections at wind turbine (if applicable).
   2. Suitable for use with aluminum conductors.
   3. Install per manufacturer's recommendations.

SECTION 12 - SURGE ARRESTERS

A. Surge Arresters:
   1. 600 A, dead break with IEEE Std 386 interface.
   2. For use on 34.5 kV RMS line-to-line system.
   3. MCOV rating as indicated on drawings.

B. Installation:
   1. Accordance with manufacturer's instructions.
   2. Install per manufacturers recommendations, owner's scope of work, and as shown on the drawings.
   3. Arrester ground wires shall be bonded to local ground wire in equipment.

SECTION 13 - FIBER OPTIC CABLE

A. Fiber Optic Cable:
   1. The fiber optic cable shall be single mode, 9/125 micron cable with 12 strands.
   2. Single jacket, loose tube with water blocking material cable to be placed in an underground duct application.
   3. Fiber to be installed in 1.25" HDPE innerduct per the drawings.

B. Fiber Optic Cable Termination sand Splice Enclosures:
   1. Terminations shall be completed with either an approved fiber optic pigtail kit or with approved mechanical connectors and an approved fanout kit.
   2. Splice enclosure shall be mechanical sealed thermoplastic units.

C. The fiber hand holes shall be a precast polymer concrete for underground construction.

D. Fiber Optical Cable Installation:
   1. Installation shall be done in a professional manner in accordance with the Drawings and Specifications.
   2. All material shall be stored so as to be protected from deteriorating effects of the elements.
   3. All fiber optic cable testing shall be performed with an Optical Time Domain Reflectometer (OTDR) in both directions. Testing shall be completed on each fiber optic cable and strand, from termination to termination.
   4. All manufacturer's recommendations and installation procedures shall be explicitly followed.
   5. Cable shall be installed with proper observance of cable's minimum bending radius during installation , and permanent , per the manufacturer.
   6. The contractor shall be proficient with all requirements of the installation procedures.
   7. Patch Panel Labeling: If the cable manufacturer has not color coded the individual strands then the strands shall be labeled with sequential numbers
   8. Every cable shall be labeled on both ends.
   9. The label on the cable shall be placed as close to the end of the cable where the sheathing has been stripped away. It shall be placed in a location easily viewable after the cable has been installed.
   10. Additional labeling shall be used as required to enable fast and reliable assembly and maintenance of network. Any additional labeling shall be standardized throughout the project, recorded, and documented.

Westwood
Surveying & Engineering

Phone (952) 937-5150
Fax (952) 937-5822
Toll Free (888) 937-5150

12701 Whitewater Drive, Suite #300
Minnetonka, MN 55343
ww-pc.com

Westwood Surveying and Engineering, P.C.

STATE OF NEW YORK · ANDREW N. SABO · 099489 · LICENSED PROFESSIONAL ENGINEER

1-26-2024

PREPARED FOR:

Hoffman Falls Wind LLC

90 State Street, Suite 700
Albany, NY 12207

REVISIONS:

#	DATE	COMMENT	BY	CHK	APR
A	09/08/2023	30% ELECTRICAL DESIGN	JON	GVH	DNS
B	01/26/2024	60% ELECTRICAL DESIGN	JON	GVH	DNS

Hoffman Falls Wind Project

Madison County, New York

Electrical Notes

ISSUE FOR PERMIT

DATE: 01/26/2024

SHEET: E0010

REV: B

ABBREVEATIONS:

A, AMP	AMPERAGE
A/E	ARCHITECT/ENGINEER
AAT	AMBIENT AIR TEMPERATURE SENSOR
ABAN	ABANDON
ABC	AGGREGATE BASE COURSE
AC	ALTERNATING CURRENT
ACC	ASPHALTIC CONCRETE PAVEMENT
ADDL	ADDITIONAL
ADJ	ADJUSTABLE/ADJACENT
AFCI	ARC FAULT CIRCUIT INTERRUPTER
AFF	ABOVE FINISH FLOOR
AFG	ABOVE FINISH GRADE
AGGR	AGGREGATE
AIC	AMPS INTERRUPTING CAPACITY
AL	ALUMINUM
ALIG	ALIGNMENT
ALT	ALTERNATE
ANE	ANEMOMETER
ANSI	AMERICAN NATIONAL STANDARDS INSTITUTE
APRX	APPROXIMATE
APVD	APPROVED
ARCH	ARCHITECTURAL
ASSY	ASSEMBLY
ATS	AUTOMATIC TRANSFER SWITCH
AUTO	AUTOMATIC
AUX	AUXILIARY
AWG	AMERICAN WIRE GAUGE
BAT	BATTERY
BITUM	BITUMINOUS
BKR	BREAKER
BL	BASE LINE
BLDG	BUILDING
BMP	BEST MANAGEMENT PRACTICE
BOC	BACK OF CURB
BRD	BOARD
BUS	BUS CONDUCTOR
C	CONDUIT
C&G	CURB AND GUTTER
CAB	CABINET
CB, CBK	CIRCUIT BREAKER
CBL	CABLE
CCB	CONCRETE BLOCK
CCTV	CLOSED CIRCUIT TELEVISION
CE	CONCRETE EDGE
CF	CUBIC FOOT/FEET
CHGR	BATTERY CHARGER
CIP	CAST-IN-PLACE
CL	CENTERLINE
CLM	CELLULAR MODEM
CLR	CLEAR, CLEARANCE
CMB	COMBINER BOX
CMP	CORRUGATED METAL PIPE
CMT	CHECK METER
CMU	CONCRETE MASONRY UNIT
CNT	CONDUIT
CO	CLEANOUT
CONC	CONCRETE
CONN	CONNECTION
CONST	CONSTRUCTION
CONTR	CONTRACTOR
CPC	CAPACITOR BANK
CT	CURRENT TRANSFORMER
CTR	CENTER
CTRL	CONTROL
CU	COPPER
DAM	DATA ACQUISITION MODULE
DAS	DATA ACQUISITION SYSTEM
DC	DIRECT CURRENT
DCA	DISCONNECT - AC
DCD	DISCONNECT - DC
DCF	DISCONNECT - FUSED
DCH	DISCONNECT - HIGH VOLTAGE
DCM	DISCONNECT - MEDIUM VOLTAGE
DCI	COMBINER INPUT AT INVERTER
DEMO	DEMOLITION
DIA	DIAMETER
DISC	DISCONNECT
DTL	DETAIL
DWG	DRAWING
EA	EACH
EL	ELEVATION
ELEC	ELECTRIC/ELECTRICAL
EMT	ELECTRICAL METAL TUBING
ENGR	ENGINEER
EOP	EDGE OF PAVEMENT
EQ	EQUAL
EQUIP	EQUIPMENT
EST	ESTIMATE
EXC	EXCAVATION
EXIST	EXISTING
F	FUSE
FBO	FURNISHED BY OTHERS
FG	FINISHED GRADE
FLR	FLOOR
FLUOR	FLUORESCENT
FOC	FACE OF CONCRETE/CURB
FT	FEET/FOOT
FUT	FUTURE
GEN	GENERAL
GFI	GROUND FAULT INTERRUPTER
GND	GROUND CONDUCTOR
GR	GRADE
GSW	GANG-OPERATED SWITCH
GVL	GRAVEL
HORIZ	HORIZONTAL
HP	HORSE POWER
HPY	HORIZONTAL PYRANOMETER
HT	HEIGHT
HZ	HERTZ
I, INV	INVERTER
ID	INSIDE DIAMETER
IE	INVERT ELEVATION
IMC	INTERMEDIATE METALLIC CONDUIT
IN	INCH
INS	INSULATOR
INV	INVERT
JB	JUNCTION BOX (J-BOX)
JBM	JUNCTION BOX - MEDIUM VOLTAGE
JMP	JUMPER CONDUCTOR
KO	KNOCKOUT
kV	KILOVOLT
kVA	KILOVOLT AMPERE
kVAR	KILOVOLT AMPERE REACTIVE
kW	KILOWATT
kWH	KILOWATT HOUR
LAR	LIGHTNING ARRESTOR
LATL	LATERAL
LBS	POUNDS
LP	LOWPOINT
LT	LIGHT
LTG	LIGHTING
LV	LOW VOLTAGE
MA	MILLIAMPERE
MATL	MATERIAL
MAX	MAXIMUM
MBR	MAIN BREAKER
MCB	MAIN CIRCUIT BREAKER
MCC	MOTOR CONTROL CENTER
MET	METERING STATION
MFR	MANUFACTURER
MIN	MINIMUM
MLO	MAIN LUG ONLY
MON	MONUMENT
MPNL	METER PANEL
MTD	MOUNTED
MTR	METER
NA	NOT APPLICABLE
NC	NORMALLY CLOSED
NDS	NIGHTTIME DISCONNECT SWITCH
NO	NORMALLY OPEN
NTS	NOT TO SCALE
OC	ON CENTER
OHC	OVERHEAD CONDUCTOR
PAP	PLANE OF ARRAY PYRANOMETER
PB	PUSHBUTTON
PCC	PORTLAND CONCRETE PAVEMENT
PEN	ROOF PENETRATION
PF	POWER FACTOR
PH,Φ	PHASE
PIL	SUPPORT PILE
PL	PROPERTY LINE
PLC	PROGRAMMABLE LOGIC CONTROLLER
PLS	POLE - STEEL
PLW	POLE - WOOD
PNL	PANEL
PROP	PROPERTY/PROPOSED
PVC	POLYVINYL CHLORIDE
PVMT	PAVEMENT
PWR	POWER
QTY	QUANTITY
R	RADIUS
R&R	REMOVE AND REPLACE
R&S	REMOVE AND SALVAGE
RCB	RECOMBINER BOX
RCPT	RECEPTACLE
RCT	REACTOR
REF	REFERENCE
REL	RELAY
REQD	REQUIRED
RET	RETAINING
REV	REVISION
RGH	ROUGH
RM	ROOM
RMT	REVENUE METER
RTU	RTU
SA	SURGE ARRESTOR
SAN	SANITARY
SC	SEPARABLE CONNECTOR
SCHED	SCHEDULE
SD	STORM DRAIN
SEC	SECTIONALIZER
SHT	SHEET
SL	SLOPE
SOG	SLAB ON GRADE
SPD	SURGE PROTECTOR DEVICE
SPEC	SPECIFICATION
SQ	SQUARE
SQ FT	SQUARE FEET
STA	STATION
STD	STANDARD
STL	STRUCTURAL STEEL
SW	SWITCH
SWBD	SWITCHBOARD
SWF	SWITCH - FUSED
SWG	MEDIUM VOLTAGE SWITCHGEAR
SY	SQUARE YARD
SYS	SYSTEM
T&B	TOP AND BOTTOM
TB	TAP BOX
TC	TRACKER CONTROLLER
TEL	TELEPHONE
TFH	TRANSFORMER - MAIN STEP-UP
TFM	TRANSFORMER - INVERTER STEP-UP
TFS	TRANSFORMER - STATION SERVICE
THS	THERMAL SENSOR
TM	TRACKER MOTOR
TOB	TOP OF BERM
TOC	TOP OF CURB
TOPO	TOPOGRAPHY
TOS	TOP OF SLAB/TOE OF SLOPE
TT	TORQUE TUBE
TVSS	TRANSIENT VOLTAGE SURGE SUPPRESSOR
TYP	TYPICAL
UCT	UNDERGROUND CABLE TERMINATION
UG	UNDERGROUND
UNO	UNLESS NOTED OTHERWISE
UPS	UNINTERRUPTIBLE POWER SUPPLY
UTIL	UTILITY
V	VOLT
VA	VOLT AMPERE
VT	VOLTAGE TRANSFORMER
W	WATT
W/	WITH
W/O	WITHOUT
WP	WEATHERPROOF
WS	WEATHER STATION
WSS	WIND STOW SWITCHES
WTG	WIND TURBINE GENERATOR
WVA	WEATHER VANE
XFMR	TRANSFORMER
XSECT	CROSS SECTION

GENERAL SYMBOLOGY:

NORTH ARROW

X — KEYNOTE

OR X — CONDUCTOR ID

DETAIL TITLE

1 Drawing Title
1"=20' — SCALE
DETAIL NUMBER

DETAIL CALLOUT

X — DETAIL NUMBER
XX — DRAWING NUMBER

SECTION CALLOUT

DETAIL NUMBER — 1
DRAWING NUMBER — 101

ELEVATION CALLOUT

1 — DETAIL NUMBER
101 — DRAWING NUMBER

PLAN LINE SYMBOLOGY:

X	CHAINLINK SECURITY FENCE
UMV1	UNDERGROUND MVAC CIRCUIT 1
UMV2	UNDERGROUND MVAC CIRCUIT 2
UMV3	UNDERGROUND MVAC CIRCUIT 3
UMV4	UNDERGROUND MVAC CIRCUIT 4
UMV5	UNDERGROUND MVAC CIRCUIT 5
A-PLG	ALTERNATE UNDERGROUND MVAC CIRCUIT
P-POH	OVERHEAD CABLES
UMV1	UNDERGROUND FIBER OPTIC CIRCUIT 1
UMV2	UNDERGROUND FIBER OPTIC CIRCUIT 2
UMV3	UNDERGROUND FIBER OPTIC CIRCUIT 3
UMV4	UNDERGROUND FIBER OPTIC CIRCUIT 4
UMV5	UNDERGROUND FIBER OPTIC CIRCUIT 5
COMM	GENERAL COMM. CIRCUIT
ULV	UNDERGROUND LVAC WIRE

MATERIALS IN PLAN/SECTION:

RIPRAP (PLAN AND/OR SECTION)

CONCRETE (PLAN AND/OR SECTION)

GRANULAR FILL (SECTION)

UNDISTURBED EARTH (SECTION)

COMPACTED EARTH (SECTION)

SAND (SECTION)

ELECTRICAL SYMBOLOGY:

M	MOTOR
	FUSE
	SWITCH/DISCONNECT
	FUSED SWITCH/DISCONNECT
	BREAKER
	GANG-OPERATED AIRBREAK SWITCH
	TRANSFORMER
	SURGE ARRESTOR
N-L	NON-LOAD BREAK ELBOW
L	LOAD BREAK ELBOW
52	DRAW OUT MV CIRCUIT BREAKER
FI	FAULT INDICATOR
	3-PHASE: GROUNDED WYE
	3-PHASE: UNGROUNDED WYE
	3-PHASE: DELTA
	3-PHASE: CORNER GROUNDED DELTA
	3-PHASE: CENTER GROUNDED DELTA
HH	HANDHOLE
M	POWER METER
	CURRENT TRANSFORMER
	POTENTIAL TRANSFORMER

NOTES:

1. THIS IS A STANDARD SYMBOLOGY AND ABBREVIATION SHEET. ALL SYMBOLS AND ABBREVIATIONS ARE NOT NECESSARILY USED ON THIS PROJECT.
2. SYMBOLS AND ABBREVIATIONS, SHOWN ON THIS PLAN, APPLY TO THIS ENTIRE SET OF PLANS.
3. SCREENING OR SHADING OF WORK IS USED TO INDICATE EXISTING COMPONENTS OR TO DE-EMPHASIZE PROPOSED IMPROVEMENTS TO HIGHLIGHT SELECTED TRADE WORK. REFER TO CONTEXT OF EACH SHEET FOR USAGE.

EQUIPMENT LABELING KEY

PART	TYPICAL NAMING	RANGE	EXAMPLE
MV CIRCUIT	MV(FEEDER ID)		MV1
	FEEDER ID	1, 2, 3, 4, 5	
TURBINE	T-(TURBINE NUMBER)		T-01
	TURBINE NUMBER	01-24	
MV JUNCTION BOX	JB(FEEDER ID)-(BOX NUMBER)		JB-1A
	FEEDER ID	1, 2, 3, 4, 5	
	BOX NUMBER	A-X	
MV CABLE SPLICE	SP(FEEDER ID)-(BOX NUMBER)		SP1-2
	FEEDER ID	1, 2, 3, 4, 5	
	BOX NUMBER	1-X	
MV CABLE	(FEEDER ID).MV.(SOURCE)-(DESTINATION)		1.MV.SUB-T-01 1.MV.JB1A-T-07 1.MV.SP1-1-T-01 1.MV.T-01-T-02
	FEEDER ID	1, 2, 3, 4	
	SOURCE-DESTINATION - EXAMPLE	SUB-T-01	
	SOURCE-DESTINATION - EXAMPLE	JB1A-T-07	
	SOURCE-DESTINATION - EXAMPLE	SP.1-T-01	
	SOURCE-DESTINATION - EXAMPLE	T-01-T-02	

EQUIPMENT LABELING KEY

AUX PANELBOARD	PNL.(TURBINE NUMBER)		PNL.01
	TURBINE NUMBER	01-24	
FO PATCH PANEL	FOPP-(TURBINE NUMBER)		FOPP-01
	TURBINE NUMBER	01-24	
FO CABLE SPLICE	FOSP(FEEDER ID)-(BOX NUMBER)		FOSP1-1
	FEEDER ID	1, 2, 3, 4, 5	
	BOX NUMBER	1-X	
FIBER CABLE	FO(FEEDER ID)		FO1
	FEEDER ID	1, 2, 3, 4, 5	
MET TOWER	MET-(MET TOWER NUMBER)		MET-1
	MET TOWER NUMBER	1-X	
BORE LABEL	DB(FEEDER ID)-(BORE NUMBER)		DB1-1
	BORE NUMBER	1-X	

Westwood Surveying & Engineering
Phone (952) 937-5150
Fax (952) 937-5822
Toll Free (888) 937-5150
12701 Whitewater Drive, Suite #300
Minnetonka, MN 55343
ww-pc.com
Westwood Surveying and Engineering, P.C.

STATE OF NEW YORK · ANDREW N. SABO · 099489 · LICENSED PROFESSIONAL ENGINEER

1-26-2024

PREPARED FOR:

Hoffman Falls Wind LLC

90 State Street, Suite 700
Albany, NY 12207

REVISIONS:

#	DATE	COMMENT	BY	CHK	APR
A	09/08/2023	30% ELECTRICAL DESIGN	JON	GVH	DNS
B	01/26/2024	60% ELECTRICAL DESIGN	JON	GVH	DNS

Hoffman Falls Wind Project

Madison County, New York

Symbology & Abbreviations

ISSUE FOR PERMIT

DATE: 01/26/2024

SHEET: E0020

REV: B

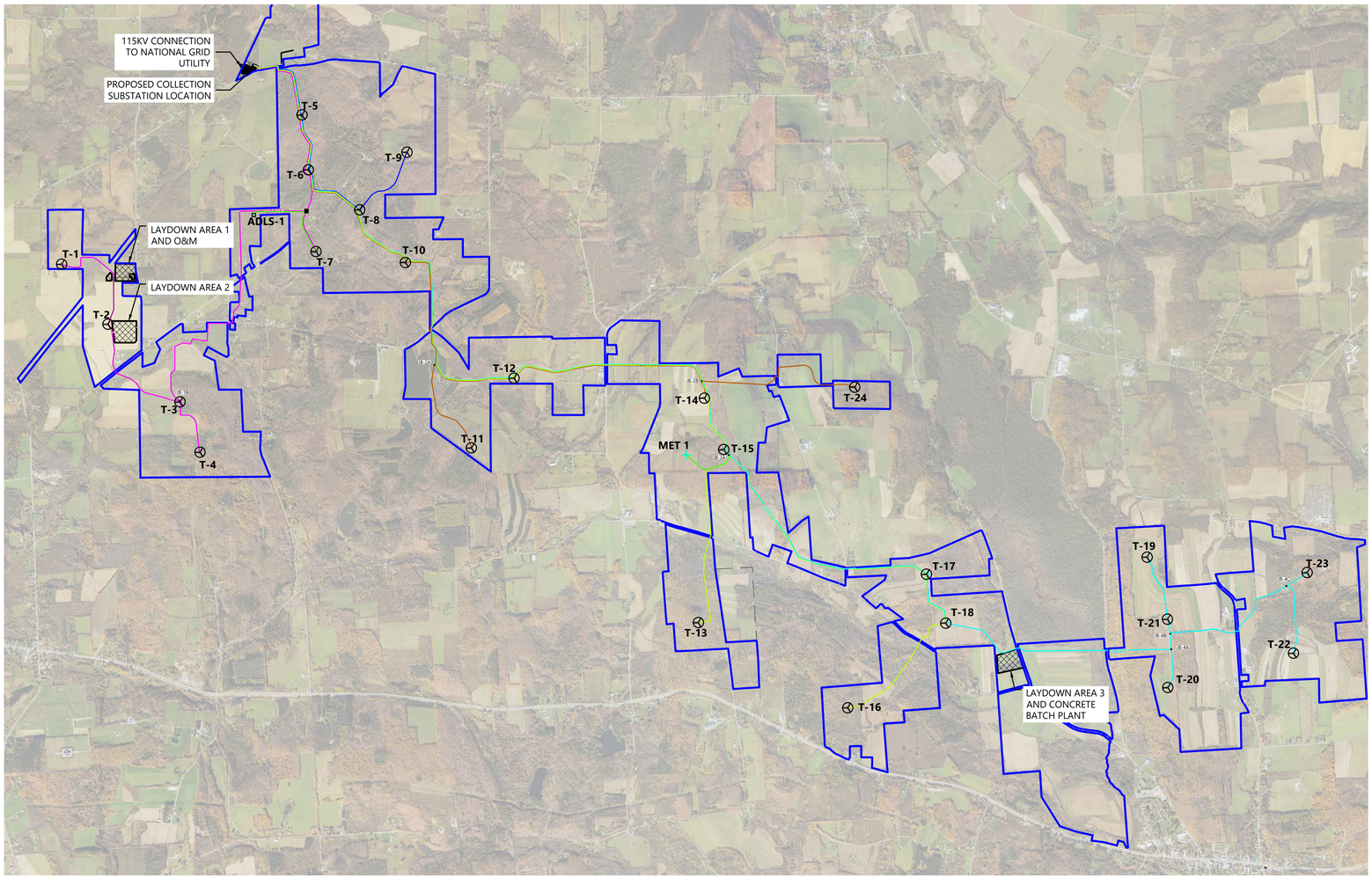

LEGEND:

- T-# — WIND TURBINE
- MET-# — MET TOWER LOCATION
- ADLS TOWER
- JB-#X — JUNCTION BOX
- X — CHAINLINK SECURITY FENCE
- UMV1 — UNDERGROUND MVAC CIRCUIT 1
- UMV2 — UNDERGROUND MVAC CIRCUIT 2
- UMV3 — UNDERGROUND MVAC CIRCUIT 3
- UMV4 — UNDERGROUND MVAC CIRCUIT 4
- UMV5 — UNDERGROUND MVAC CIRCUIT 5
- A-PUG — UNDERGROUND POWER CABLES
- P-POH — OVERHEAD POWER LINE
- ULV — UNDERGROUND LVAC CIRCUIT
- PROPOSED ACCESS ROAD
- OVERALL PROJECT BOUNDARY
- ROAD RIGHT-OF-WAY LINES
- PROPOSED LAYDOWN YARD

Westwood Surveying & Engineering

Phone (952) 937-5150
Fax (952) 937-5822
Toll Free (888) 937-5150

12701 Whitewater Drive, Suite #300
Minnetonka, MN 55343
ww-pc.com

Westwood Surveying and Engineering, P.C.

STATE OF NEW YORK · ANDREW N. SZABO · 099489 · LICENSED PROFESSIONAL ENGINEER

1-26-2024

PREPARED FOR:

Hoffman Falls Wind LLC

90 State Street, Suite 700
Albany, NY 12207

REVISIONS:

#	DATE	COMMENT	BY	CHK	APR
A	09/08/2023	30% ELECTRICAL DESIGN	JON	GVH	DNS
B	01/26/2024	60% ELECTRICAL DESIGN	JON	GVH	DNS

N

0' 2000' 4000' 6000'

Hoffman Falls Wind Project

Madison County, New York

Overall MV Site Plan

	E1100	E1101					
E1102	E1103	E1104	E1105	E1106			
	E1107	E1108		E1109	E1110	E1111	E1112
				E1113	E1114	E1115	E1116

KEY MAP

ISSUE FOR PERMIT

DATE: 01/26/2024

SHEET: E1000

REV: B

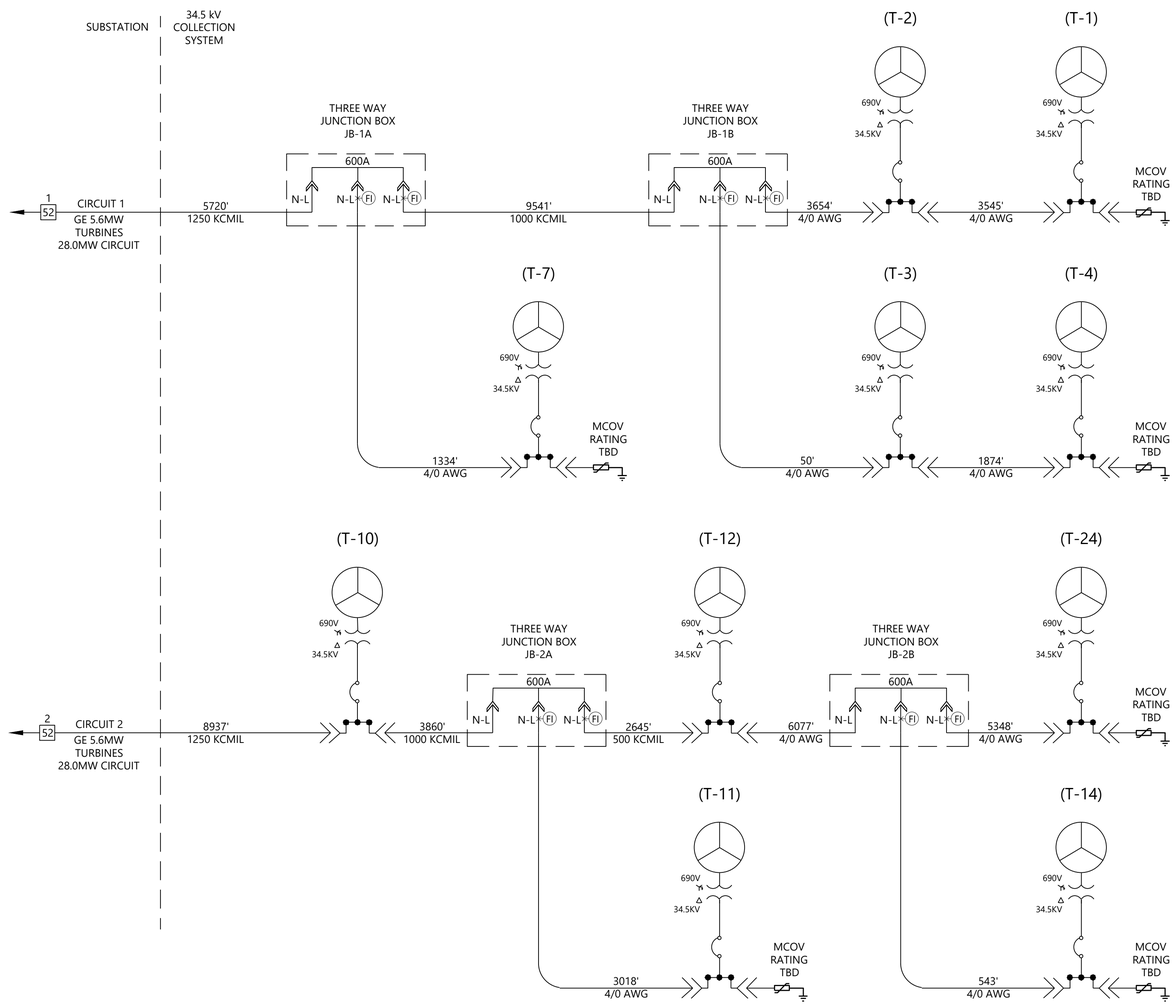

1 Circuits 1 and 2
NTS

MVAC WIRING SCHEDULE											
CONDUCTOR LOCATION CODE	ORIGINATING EQUIPMENT	TERMINATING EQUIPMENT	RATED Vac (kV)	Iac (A)	LENGTH (FT)	CONDUCTOR SIZE	BACKFILL COMPACTION (%)	CONDUCTOR MATERIAL	GROUND CONDUCTOR SIZE	GROUND CONDUCTOR MATERIAL	CONDUCTOR SPECIFICS
F1.MV-SUB-JB-1A	SUB	JB-1A	34.5	468.57	5,720	3#1250 KCMIL	90	AL	1/0 AWG	Copper	35kV, 1/C, Trefoil, 100% Insulation TR-XLPE, Type MV-105, 7#7 Concentric Neutral, XLPE Jacket
F1.MV-JB-1A-T-7	JB-1A	T-7	34.5	93.71	1,334	3#4/0 AWG	90	AL	1/0 AWG	Copper	35kV, 1/C, Trefoil, 100% Insulation TR-XLPE, Type MV-105, 7#7 Concentric Neutral, XLPE Jacket
F1.MV-JB-1A-JB-1B	JB-1A	JB-1B	34.5	374.86	9,541	3#1000 KCMIL	90	AL	1/0 AWG	Copper	35kV, 1/C, Trefoil, 100% Insulation TR-XLPE, Type MV-105, 7#7 Concentric Neutral, XLPE Jacket
F1.MV-JB-1B-T-3	JB-1B	T-3	34.5	187.43	50	3#4/0 AWG	90	AL	1/0 AWG	Copper	35kV, 1/C, Trefoil, 100% Insulation TR-XLPE, Type MV-105, 7#7 Concentric Neutral, XLPE Jacket
F1.MV-T-3-T-4	T-3	T-4	34.5	93.71	1,874	3#4/0 AWG	90	AL	1/0 AWG	Copper	35kV, 1/C, Trefoil, 100% Insulation TR-XLPE, Type MV-105, 7#7 Concentric Neutral, XLPE Jacket
F1.MV-JB-1B-T-2	JB-1B	T-2	34.5	187.43	3,654	3#4/0 AWG	90	AL	1/0 AWG	Copper	35kV, 1/C, Trefoil, 100% Insulation TR-XLPE, Type MV-105, 7#7 Concentric Neutral, XLPE Jacket
F1.MV-T-2-T-1	T-2	T-1	34.5	93.71	3,545	3#4/0 AWG	90	AL	1/0 AWG	Copper	35kV, 1/C, Trefoil, 100% Insulation TR-XLPE, Type MV-105, 7#7 Concentric Neutral, XLPE Jacket
F2.MV-SUB-T-10	SUB	T-10	34.5	468.57	8,937	3#1250 KCMIL	90	AL	1/0 AWG	Copper	35kV, 1/C, Trefoil, 100% Insulation TR-XLPE, Type MV-105, 7#7 Concentric Neutral, XLPE Jacket
F2.MV-T-10-JB-2A	T-10	JB-2A	34.5	374.86	3,860	3#1000 KCMIL	90	AL	1/0 AWG	Copper	35kV, 1/C, Trefoil, 100% Insulation TR-XLPE, Type MV-105, 7#7 Concentric Neutral, XLPE Jacket
F2.MV-JB-2A-T-11	JB-2A	T-11	34.5	93.71	3,018	3#4/0 AWG	90	AL	1/0 AWG	Copper	35kV, 1/C, Trefoil, 100% Insulation TR-XLPE, Type MV-105, 7#7 Concentric Neutral, XLPE Jacket
F2.MV-JB-2A-T-12	JB-2A	T-12	34.5	281.14	2,645	3#500 KCMIL	90	AL	1/0 AWG	Copper	35kV, 1/C, Trefoil, 100% Insulation TR-XLPE, Type MV-105, 7#7 Concentric Neutral, XLPE Jacket
F2.MV-T-12-JB-2B	T-12	JB-2B	34.5	187.43	6,077	3#4/0 AWG	90	AL	1/0 AWG	Copper	35kV, 1/C, Trefoil, 100% Insulation TR-XLPE, Type MV-105, 7#7 Concentric Neutral, XLPE Jacket
F2.MV-JB-2B-T-14	JB-2B	T-14	34.5	93.71	543	3#4/0 AWG	90	AL	1/0 AWG	Copper	35kV, 1/C, Trefoil, 100% Insulation TR-XLPE, Type MV-105, 7#7 Concentric Neutral, XLPE Jacket
F2.MV-JB-2B-T-24	JB-2B	T-24	34.5	93.71	5,348	3#4/0 AWG	90	AL	1/0 AWG	Copper	35kV, 1/C, Trefoil, 100% Insulation TR-XLPE, Type MV-105, 7#7 Concentric Neutral, XLPE Jacket

NOTES:

1. WIND TURBINE GENERATORS DESIGNED AND ASSEMBLED BY OTHERS AND SHOWN FOR REFERENCE ONLY. WESTWOOD PROFESSIONAL SERVICES NOT RESPONSIBLE FOR WIND TURBINE GENERATOR DESIGN CONFORMING TO NEC OR ANY OTHER APPLICABLE LOCAL, STATE OR NATIONAL RECOGNIZED CODES OR REGULATIONS.
2. PROVIDE EXTERNAL SURGE ARRESTERS AT END-OF-LINE SWITCHGEAR BUSHINGS.
3. INSTALL ALL EQUIPMENT AND WIRING IN ACCORDANCE WITH THE NEC AND NESC.
4. ABOVE-GRADE JUNCTION BOXES OR DIRECT BURIED SPLICES TO BE INSTALLED AS NECESSARY WHERE RUN LENGTHS EXCEED AVAILABLE REEL LENGTHS.
5. DISTANCES SHOWN REFLECT LINEAR 2D DISTANCES BETWEEN TURBINES. TERMINATION LENGTH OF 50' SHOULD BE ADDED AT EACH END. CONTRACTOR SHALL PROVIDE ADDITIONAL LENGTH FOR ELEVATION CHANGE AND WASTE.
6. PRELIMINARY CABLE SIZING BASED ON ASSUMED SOIL RESISTIVITY OF 220 C-CM/W, CORRESPONDING TO AN ASSUMED NATIVE BACKFILL AT 85% COMPACTION. FINAL CABLE SIZING TO BE DETERMINED AFTER SITE SPECIFIC SOIL THERMAL RESISTIVITY DATA IS OBTAINED.
7. GROUND CONDUCTOR TO BE RUN WITH ALL MV CABLES, SIZING PENDING FUTURE STUDIES.
8. CONCENTRIC NEUTRALS SHALL BE BONDED TO GROUND AT ALL TERMINATIONS AND AT SPLICE LOCATIONS.
9. THE REPRESENTATION OF CABLE CONNECTION AND CIRCUIT BREAKER AT WIND TUBINE IS CONCEPTUAL PENDING FINAL SELECTION OF SWITCHGEAR STYLE.

LEGEND:

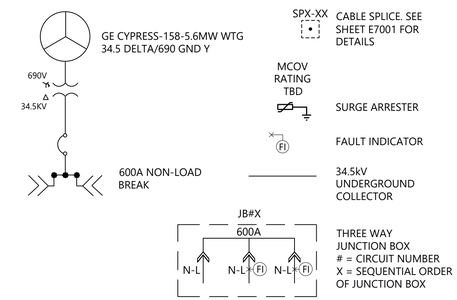

Westwood Surveying & Engineering
Phone (952) 937-5150
Fax (952) 937-5822
Toll Free (888) 937-5150
12701 Whitewater Drive, Suite #300
Minnetonka, MN 55343
ww-pc.com
Westwood Surveying and Engineering, P.C.

STATE OF NEW YORK · ANDREW N. SABO · 099489 · LICENSED PROFESSIONAL ENGINEER
1-26-2024

PREPARED FOR:

Hoffman Falls Wind LLC

90 State Street, Suite 700
Albany, NY 12207

REVISIONS:

#	DATE	COMMENT	BY	CHK	APR
A	09/08/2023	30% ELECTRICAL DESIGN	JON	GVH	DNS
B	01/26/2024	60% ELECTRICAL DESIGN	JON	GVH	DNS

Hoffman Falls Wind Project

Madison County, New York

MV Circuit Single Line Diagram

ISSUE FOR PERMIT

DATE: 01/26/2024

SHEET: E1300

REV: B

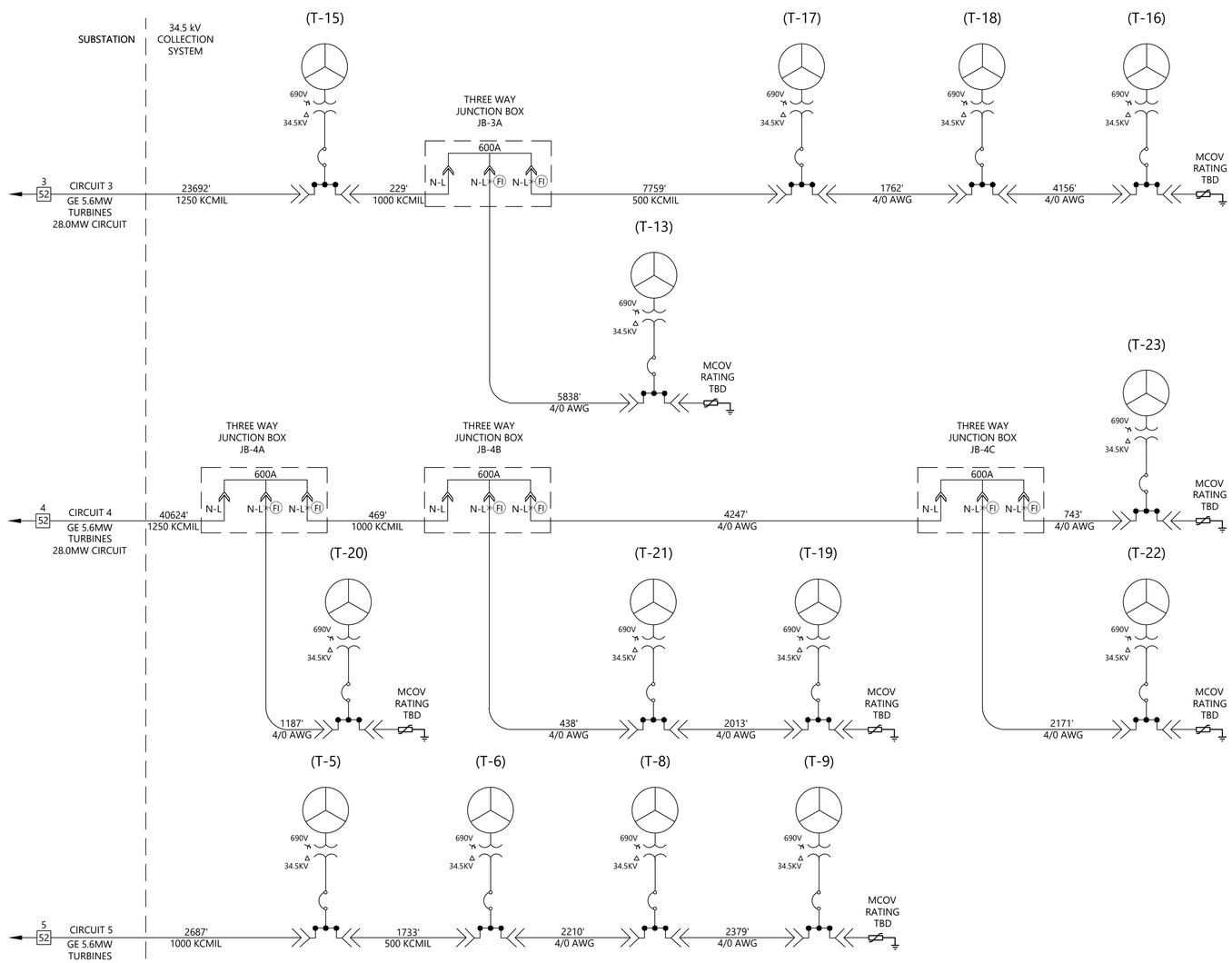

1 Circuits 3, 4, and 5

NTS

NOTES:

1. WIND TURBINE GENERATORS DESIGNED AND ASSEMBLED BY OTHERS AND SHOWN FOR REFERENCE ONLY. WESTWOOD PROFESSIONAL SERVICES NOT RESPONSIBLE FOR WIND TURBINE GENERATOR DESIGN CONFORMING TO NEC OR ANY OTHER APPLICABLE LOCAL, STATE OR NATIONAL RECOGNIZED CODES OR REGULATIONS.
2. PROVIDE EXTERNAL SURGE ARRESTERS AT END-OF-LINE SWITCHGEAR BUSHINGS.
3. INSTALL ALL EQUIPMENT AND WIRING IN ACCORDANCE WITH THE NEC AND NESC.
4. ABOVE-GRADE JUNCTION BOXES OR DIRECT BURIED SPLICES TO BE INSTALLED AS NECESSARY WHERE RUN LENGTHS EXCEED AVAILABLE REEL LENGTHS.
5. DISTANCES SHOWN REFLECT LINEAR 2D DISTANCES BETWEEN TURBINES. TERMINATION LENGTH OF 50' SHOULD BE ADDED AT EACH END. CONTRACTOR SHALL PROVIDE ADDITIONAL LENGTH FOR ELEVATION CHANGE AND WASTE.
6. CABLE SIZING BASED ON SOIL RESISTIVITY OF 120 C-CM/W, CORRESPONDING TO AN ASSUMED NATIVE BACKFILL AT 90% COMPACTION.
7. GROUND CONDUCTOR TO BE RUN WITH ALL MV CABLES, SIZING PENDING FUTURE STUDIES.
8. CONCENTRIC NEUTRALS SHALL BE BONDED TO GROUND AT ALL TERMINATIONS AND AT SPLICE LOCATIONS.
9. TWO HORIZONTAL EARTHING ELECTRODES/TRENCH GROUNDS (CONNECTED TO THE MAIN EARTH BONDING BAR) ARE TO BE RUN IN DIFFERENT DIRECTIONS WITH A MINIMUM ANGULAR SEPARATION OF 90° AND TO A MINIMUM DISTANCE OF 263 FEET.

LEGEND:

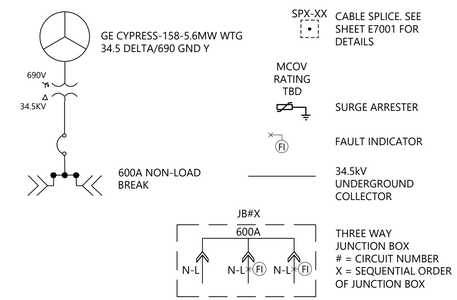

Westwood Surveying & Engineering

Phone (952) 937-5150
Fax (952) 937-5822
Toll Free (888) 937-5150

12701 Whitewater Drive, Suite #300
Minnetonka, MN 55343
ww-pc.com

Westwood Surveying and Engineering, P.C.

STATE OF NEW YORK · ANDREW N. SZABO · 099489 · LICENSED PROFESSIONAL ENGINEER

1-26-2024

PREPARED FOR:

Hoffman Falls Wind LLC

90 State Street, Suite 700
Albany, NY 12207

REVISIONS:

#	DATE	COMMENT	BY	CHK	APR
A	09/08/2023	30% ELECTRICAL DESIGN	JON	GVH	DNS
B	01/26/2024	60% ELECTRICAL DESIGN	JON	GVH	DNS

MVAC WIRING SCHEDULE

CONDUCTOR LOCATION CODE	ORIGINATING EQUIPMENT	TERMINATING EQUIPMENT	RATED Vac (kV)	Iac (A)	LENGTH (FT)	CONDUCTOR SIZE	BACKFILL COMPACTION (%)	CONDUCTOR MATERIAL	GROUND CONDUCTOR SIZE	GROUND CONDUCTOR MATERIAL	CONDUCTOR SPECIFICS
F3.MV-SUB-T-15	SUB	T-15	34.5	468.57	23,692	3#1250 KCMIL	90	AL	1/0 AWG	Copper	35kV, 1/C, Trefoil, 100% Insulation TR-XLPE, Type MV-105, 7#7 Concentric Neutral, XLPE Jacket
F3.MV-T-15-JB-3A	T-15	JB-3A	34.5	374.86	229	3#1000 KCMIL	90	AL	1/0 AWG	Copper	35kV, 1/C, Trefoil, 100% Insulation TR-XLPE, Type MV-105, 7#7 Concentric Neutral, XLPE Jacket
F3.MV-JB-3A-T-13	JB-3A	T-13	34.5	93.71	5,838	3#4/0 AWG	90	AL	1/0 AWG	Copper	35kV, 1/C, Trefoil, 100% Insulation TR-XLPE, Type MV-105, 7#7 Concentric Neutral, XLPE Jacket
F3.MV-JB-3A-T-17	JB-3A	T-17	34.5	281.14	7,759	3#500 KCMIL	90	AL	1/0 AWG	Copper	35kV, 1/C, Trefoil, 100% Insulation TR-XLPE, Type MV-105, 7#7 Concentric Neutral, XLPE Jacket
F3.MV-T-17-T-18	T-17	T-18	34.5	187.43	1,762	3#4/0 AWG	90	AL	1/0 AWG	Copper	35kV, 1/C, Trefoil, 100% Insulation TR-XLPE, Type MV-105, 7#7 Concentric Neutral, XLPE Jacket
F3.MV-T-18-T-16	T-18	T-16	34.5	93.71	4,156	3#4/0 AWG	90	AL	1/0 AWG	Copper	35kV, 1/C, Trefoil, 100% Insulation TR-XLPE, Type MV-105, 7#7 Concentric Neutral, XLPE Jacket
F4.MV-SUB-JB-4A	SUB	JB-4A	34.5	468.57	40,624	3#1250 KCMIL	90	AL	1/0 AWG	Copper	35kV, 1/C, Trefoil, 100% Insulation TR-XLPE, Type MV-105, 7#7 Concentric Neutral, XLPE Jacket
F4.MV-JB-4A-T-20	JB-4A	T-20	34.5	93.71	1,187	3#4/0 AWG	90	AL	1/0 AWG	Copper	35kV, 1/C, Trefoil, 100% Insulation TR-XLPE, Type MV-105, 7#7 Concentric Neutral, XLPE Jacket
F4.MV-JB-4A-JB-4B	JB-4A	JB-4B	34.5	374.86	469	3#1000 KCMIL	90	AL	1/0 AWG	Copper	35kV, 1/C, Trefoil, 100% Insulation TR-XLPE, Type MV-105, 7#7 Concentric Neutral, XLPE Jacket
F4.MV-JB-4B-T-21	JB-4B	T-21	34.5	187.43	438	3#4/0 AWG	90	AL	1/0 AWG	Copper	35kV, 1/C, Trefoil, 100% Insulation TR-XLPE, Type MV-105, 7#7 Concentric Neutral, XLPE Jacket
F4.MV-T-21-T-19	T-21	T-19	34.5	93.71	2,013	3#4/0 AWG	90	AL	1/0 AWG	Copper	35kV, 1/C, Trefoil, 100% Insulation TR-XLPE, Type MV-105, 7#7 Concentric Neutral, XLPE Jacket
F4.MV-JB-4B-JB-4C	JB-4B	JB-4C	34.5	187.43	4,247	3#4/0 AWG	90	AL	1/0 AWG	Copper	35kV, 1/C, Trefoil, 100% Insulation TR-XLPE, Type MV-105, 7#7 Concentric Neutral, XLPE Jacket
F4.MV-JB-4C-T-23	JB-4C	T-23	34.5	93.71	743	3#4/0 AWG	90	AL	1/0 AWG	Copper	35kV, 1/C, Trefoil, 100% Insulation TR-XLPE, Type MV-105, 7#7 Concentric Neutral, XLPE Jacket
F4.MV-JB-4C-T-22	JB-4C	T-22	34.5	93.71	2,171	3#4/0 AWG	90	AL	1/0 AWG	Copper	35kV, 1/C, Trefoil, 100% Insulation TR-XLPE, Type MV-105, 7#7 Concentric Neutral, XLPE Jacket
F5.MV-SUB-T-5	SUB	T-5	34.5	374.86	2,687	3#1000 KCMIL	90	AL	1/0 AWG	Copper	35kV, 1/C, Trefoil, 100% Insulation TR-XLPE, Type MV-105, 7#7 Concentric Neutral, XLPE Jacket
F5.MV-T-5-T-6	T-5	T-6	34.5	281.14	1,733	3#500 KCMIL	90	AL	1/0 AWG	Copper	35kV, 1/C, Trefoil, 100% Insulation TR-XLPE, Type MV-105, 7#7 Concentric Neutral, XLPE Jacket
F5.MV-T-6-T-8	T-6	T-8	34.5	187.43	2,210	3#4/0 AWG	90	AL	1/0 AWG	Copper	35kV, 1/C, Trefoil, 100% Insulation TR-XLPE, Type MV-105, 7#7 Concentric Neutral, XLPE Jacket
F5.MV-T-8-T-9	T-8	T-9	34.5	93.71	2,379	3#4/0 AWG	90	AL	1/0 AWG	Copper	35kV, 1/C, Trefoil, 100% Insulation TR-XLPE, Type MV-105, 7#7 Concentric Neutral, XLPE Jacket

Hoffman Falls Wind Project

Madison County, New York

MV Circuit Single Line Diagram

ISSUE FOR PERMIT

DATE: 01/26/2024

SHEET: E1301

REV: B

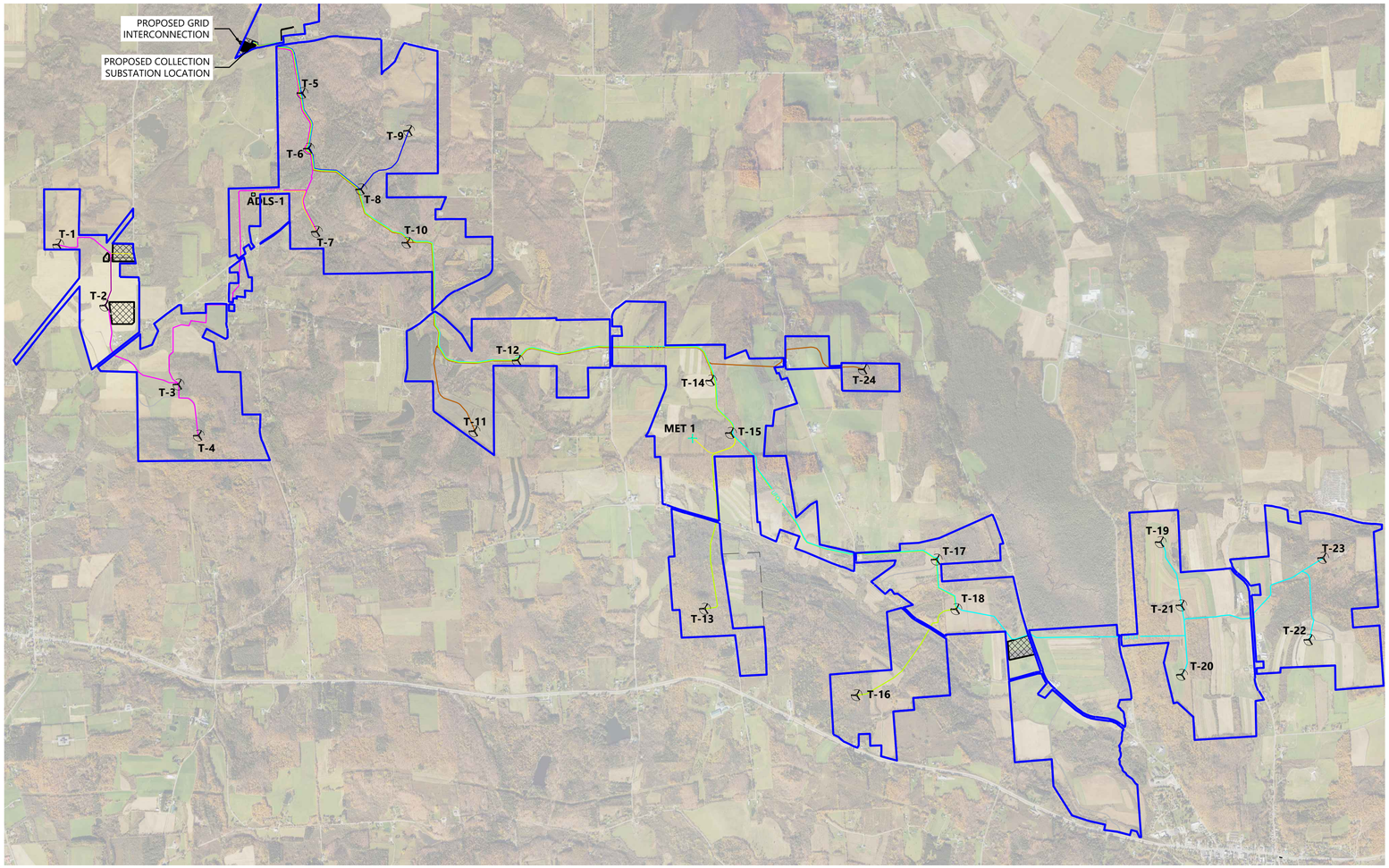

LEGEND:

- T-# — WIND TURBINE
- MET-# — MET TOWER LOCATION
- ADLS TOWER
- CHAINLINK SECURITY FENCE
- UFO1 — UNDERGROUND FIBER OPTIC CIRCUIT 1
- UFO2 — UNDERGROUND FIBER OPTIC CIRCUIT 2
- UFO3 — UNDERGROUND FIBER OPTIC CIRCUIT 3
- UFO4 — UNDERGROUND FIBER OPTIC CIRCUIT 4
- UFO5 — UNDERGROUND FIBER OPTIC CIRCUIT 5
- FO — AUXILIARY FIBER OPTIC CIRCUIT
- PROPOSED ACCESS ROAD
- OVERALL PROJECT BOUNDARY

Westwood Surveying & Engineering

Phone (952) 937-5150
Fax (952) 937-5822
Toll Free (888) 937-5150

12701 Whitewater Drive, Suite #300
Minnetonka, MN 55343
ww-pc.com

Westwood Surveying and Engineering, P.C.

STATE OF NEW YORK · ANDREW N. SZABO · 099489 · LICENSED PROFESSIONAL ENGINEER

1-26-2024

PREPARED FOR:

Hoffman Falls Wind LLC

90 State Street, Suite 700
Albany, NY 12207

REVISIONS:

#	DATE	COMMENT	BY	CHK	APR
A	09/08/2023	30% ELECTRICAL DESIGN	JON	GVH	DNS
B	01/26/2024	60% ELECTRICAL DESIGN	JON	GVH	DNS

N

0' 2000' 4000' 6000'

Hoffman Falls Wind Project

Madison County, New York

Overall Communications Site Plan

ISSUE FOR PERMIT

DATE: 01/26/2024

SHEET: E6000

REV: B

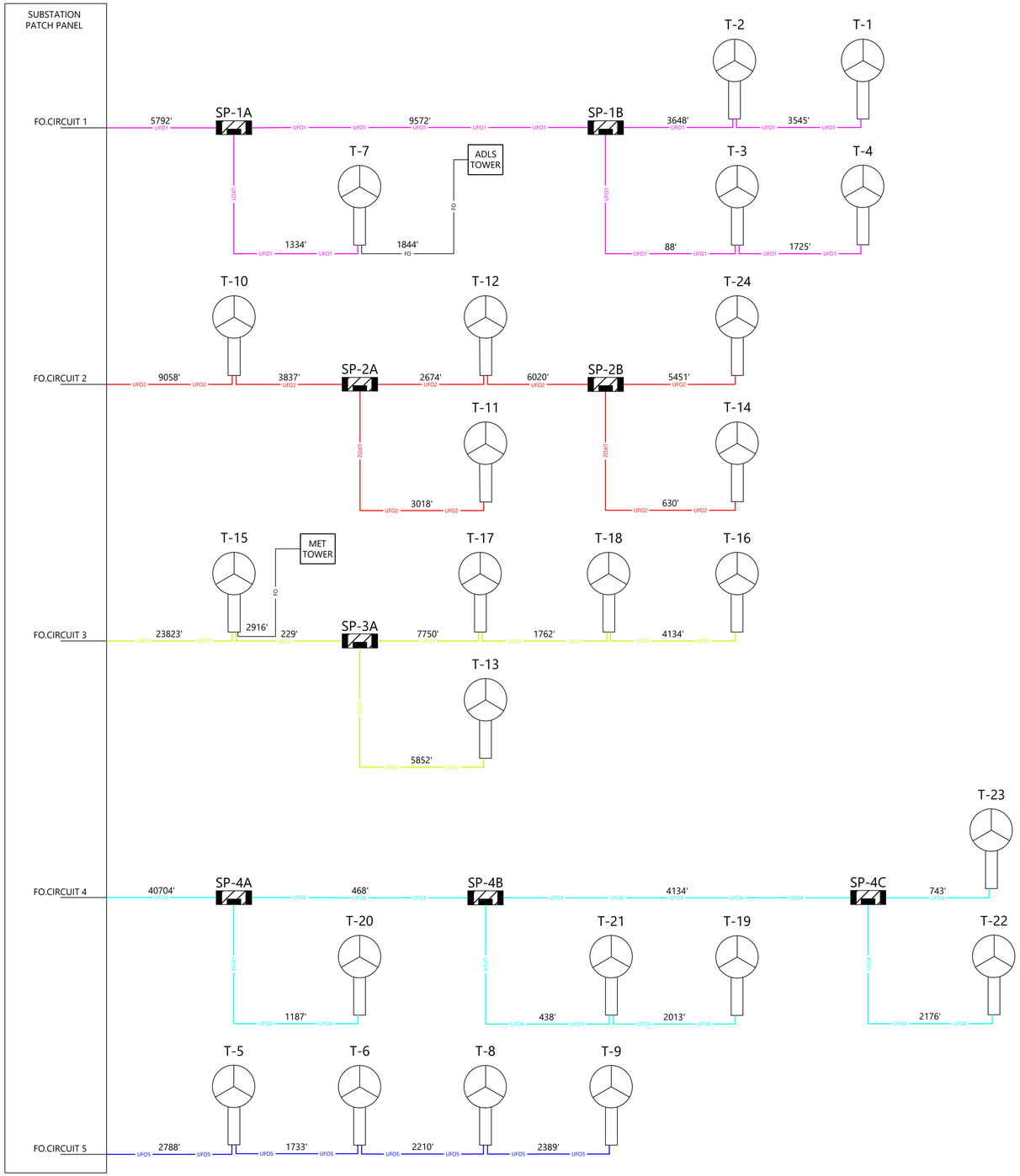

NOTES:

1. FIBER HANDHOLE LOCATED ADJACENT TO JUNCTION BOX.
2. ROUTE FIBER OPTIC CABLE IN SAME TRENCH AS MVAC WIRING WHERE AVAILABLE FOR COMMUNICATIONS AND MONITORING SITE PLANS E1000 THROUGH E1116 FOR ROUTING
3. FIBER OPTIC COMMUNICATION CABLE TO BE 9/125 UM SINGLE MODE, 12-STRAND.

LEGEND:

GE CYPRESS-158-5.6 MW WTG

UFO1 — UNDERGROUND FIBER OPTIC CIRCUIT 1
UFO2 — UNDERGROUND FIBER OPTIC CIRCUIT 2
UFO3 — UNDERGROUND FIBER OPTIC CIRCUIT 3
UFO4 — UNDERGROUND FIBER OPTIC CIRCUIT 4
UFO5 — UNDERGROUND FIBER OPTIC CIRCUIT 5
UFO6 — UNDERGROUND FIBER OPTIC CIRCUIT 6
FO — MET/ADLS UNDERGROUND FIBER OPTIC CABLE

SP-#X — FIBER OPTIC SPLICE BOX

Westwood Surveying & Engineering

Phone (952) 937-5150
Fax (952) 937-5822
Toll Free (888) 937-5150
12701 Whitewater Drive, Suite #300
Minnetonka, MN 55343
ww-pc.com

Westwood Surveying and Engineering, P.C.

STATE OF NEW YORK · ANDREW N. SZABO · 099489 · LICENSED PROFESSIONAL ENGINEER

1-26-2024

PREPARED FOR:

Hoffman Falls Wind LLC

90 State Street, Suite 700
Albany, NY 12207

REVISIONS:

#	DATE	COMMENT	BY	CHK	APR
A	09/08/2023	30% ELECTRICAL DESIGN	JON	GVH	DNS
B	01/26/2024	60% ELECTRICAL DESIGN	JON	GVH	DNS

Hoffman Falls Wind Project

Madison County, New York

Fiber Optic Single Line Diagram

ISSUE FOR PERMIT

DATE: 01/26/2024

SHEET: E6200

REV: B

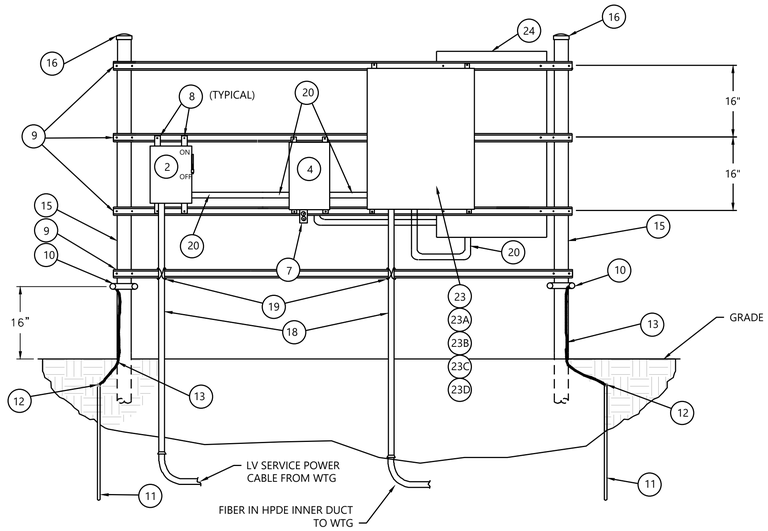

1 MET Rack - Front Elevation
NTS

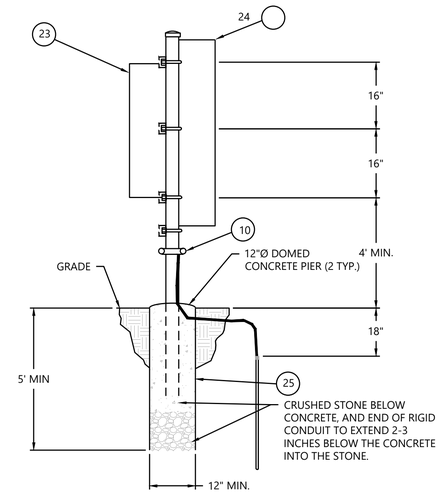

2 MET Rack - Side Elevation
NTS

NOTES:

1. EQUIPMENT MAY BE LOCATED ON THE MET TOWER BEHIND THE MET TOWER RACK AND USE ABOVE GRADE CONDUIT TO MAKE CONNECTIONS AS OPPOSED TO THE BELOW GRADE CONDUIT SHOWN. CONTRACTOR TO DETERMINE BEST SOLUTION ON THE LOCATION.
2. PER MANUFACTURER DOCUMENTATION CONNECTIONS ARE REQUIRED BETWEEN TERMINALS H3 TO H6 AND X2 TO X3 FOR PROPER OPERATION AS SHOWN BELOW.
3. ENSURE ALL ENCLOSURES ONLY HAVE ONE GROUND CONNECTION AND ARE PROPERLY GROUNDED PER THE NEC.

MATERIALS LIST

ITEM	QTY	UOM	DESCRIPTION	MANF.	PART#
1	1	EA	5KVA TRANSFORMER 400V-110/220V 1 PHASE	SQUARE D	5S67F
2	2	EA	SAFETY SWITCH , 600V, 30A 1-POLE, FUSIBLE, HEAVY DUTY, 200 KA	SQUARE D	DD221NRB
3	1	EA	FRS-R-15 AT MET SAFETY SWITCH	BUSSMAN	FRS-R-15
4	1	EA	120/240V AC LOADCENTER 70A W/SUBPANEL, 4SP, NEMA 3R ENCLOSURE	SQUARE D	QO612L100RB
5	4	EA	MINIATURE CIRCUIT BREAKER STANDARD, 20A, 1-POLE, 120/240 VAC, 10KA	SQUARE D	QO120
6	1	EA	SURGE ARRESTOR	SQUARE D	SDSA1175
7	1	EA	WEATHER PROOF GFCI RECEPTACLE, DUPLEX 20A WITH IN USE COVER	-	
8	8	FT	ENCLOSURE MOUNTING, 4 BRKT KIT FOR STRUT SYSTEM	-	
9	4	EA	1-5/8" x 1-5/8", 12 GAUGE, SLOTTED, 20'	-	
10	2	EA	BRONZE, TINNED POST CLAMP, 3 IN., #2 STR. SOL	-	
11	2	EA	GROUND ROD, COPPPER CLAD STEEL 3/4"X10'	ERICO	613400UPC
12	2	EA	COMPRESSION CONNECTOR, 3/4" CCS ROD TO #2 AWG BARE COPPER	BURNDY	YCHC34TC2
13	20	FT	CONDUCTOR, #2 CU BARE 19 STR S.D.	-	
14	20	FT	CONDUCTOR, #12 AWG CU, XHHW-2	-	
15	2	EA	PIPE, GALVANIZED STEEL, 3", 10 FT LONG	-	
16	2	EA	STEEL PIPE CAP, RIGID, 3" THREADED	-	
17	1050	FT	CABLE, CU 3/C #6 AWG, 600V	-	
18	10	FT	CONDUIT, 2" SCH 80 PVC	CARLON	A53CA12
19	A/R	EA	CONDUIT CLAMP, 2" SCH 80 PVC	-	
20	10	FT	CONDUIT, 3/4" LIQUID TIGHT	-	
21	50	FT	CONDUCTOR, #10 AWG CU, CABLE TRAY RATED	-	
22	2	EA	NEUTRAL "DUMMY" FUSE	BUSSMAN	NTS-R-60
23	1	EA	FIBER OPTIC ENCLOSURE, NEMA 3R	-	
23A	1	EA	PATCH PANEL	CORNING	WCH-029
23B	2	EA	CONNECTOR PANELS	CORNING	CCH-CP12-59
23C	1	EA	SPLICE TRAY	CORNING	M67-110
23D	1	EA	PATCH CORD	SM DUPLEX	SC-SC
24	1	EA	DATA LOGGER (BY OTHERS)	-	
25	A/R	EA	CONCRETE, MINIMUM 2000 PSI	-	
26	6	EA	ONE-HOLE LUGS FOR #6 WIRE	BURNY	Y1MRTC

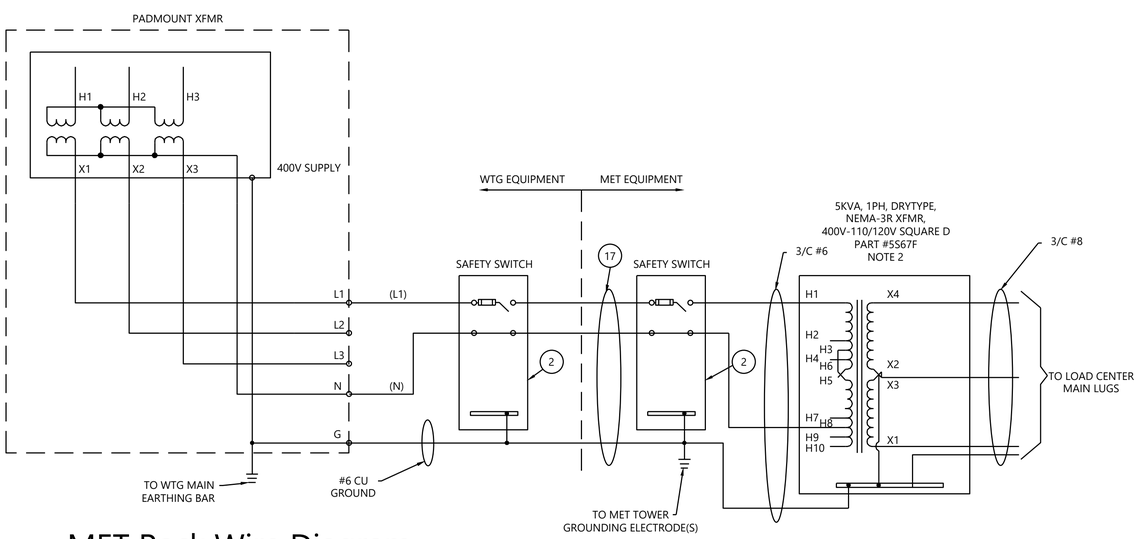

3 MET Rack Wire Diagram
NTS

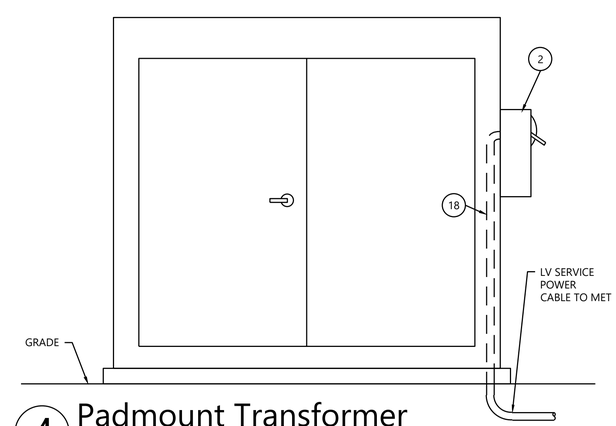

4 Padmount Transformer
NTS

Westwood Surveying & Engineering
Phone (952) 937-5150
Fax (952) 937-5822
Toll Free (888) 937-5150
12701 Whitewater Drive, Suite #300
Minnetonka, MN 55343
ww-pc.com
Westwood Surveying and Engineering, P.C.

STATE OF NEW YORK · ANDREW N. SABO · 099489 · LICENSED PROFESSIONAL ENGINEER

1-26-2024

PREPARED FOR:

Hoffman Falls Wind LLC

90 State Street, Suite 700
Albany, NY 12207

REVISIONS:

#	DATE	COMMENT	BY	CHK	APR
A	09/08/2023	30% ELECTRICAL DESIGN	JON	GVH	DNS
B	01/26/2024	60% ELECTRICAL DESIGN	JON	GVH	DNS

Hoffman Falls Wind Project
Madison County, New York

Met Tower Wiring Diagram

ISSUE FOR PERMIT

DATE: 01/26/2024

SHEET: E6400

REV: B

NOTES:

1. DETAIL 1, HANDHOLE/SPLICE BOX MAY BE USED AS HANDHOLE OR SPLICE BOX. HANDHOLES TO BE USED ADJACENT TO 3-WAY MEDIUM VOLTAGE SECTIONALIZERS.
2. PROVIDE 50 FEET TAILS OF FIBER FOR EACH CABLE WHEN USED AS SPLICE BOX.
3. DO NOT EXCEED THE MINIMUM BEND RADIUS OF 6 INCHES UNDER LOAD AND 4 INCHES WITH NO LOAD.
4. SIZE OF GROMMETS AND CLOSURE ACCESSORIES TO MEET CABLE SIZE AND QUANTITY.
5. BRING CABLE INNER DUCT INTO SPLICE BOX 3 INCHES ABOVE GRAVEL FILL.
6. SEAL ALL CONDUITS WITH FOAM AFTER CABLE INSTALLATION.
7. FILL BOTTOM OF BOXES WITH 9 INCHES PEA GRAVEL TO PREVENT RODENT ENTRY.
8. OWNER APPROVAL REQUIRED AT ANY SPLICE LOCATION

MATERIALS LIST

ITEM	QTY	UOM	DESCRIPTION	MANF.	PART#
1	A/R	EA	ECLOSURE BOX, POLYMER SPLICE BOX 13"x 24" x 18" STRAIGHT WALL OPEN BOTTOM	HUBBEL BY QUAZITE	PG1324BA18
2	1	EA	12 FIBER SPLICE ENCLOSURE, WITH 4 PORT END PLATE KIT	FIBERTRONICS	HTB-F01-12
3	1	EA	EMS MARKER BALL	3M	1401-XR

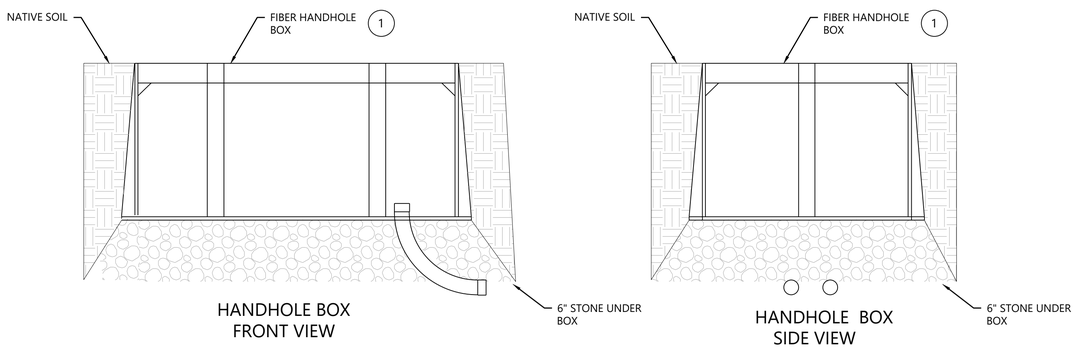

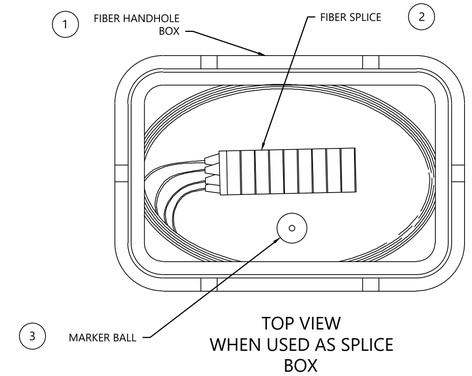

1 Fiber Handhole/Splice Box

NTS

Westwood Surveying & Engineering

Phone (952) 937-5150
Fax (952) 937-5822
Toll Free (888) 937-5150

12701 Whitewater Drive, Suite #300
Minnetonka, MN 55343
ww-pc.com

Westwood Surveying and Engineering, P.C.

STATE OF NEW YORK · ANDREW N. SZABO · 099489 · LICENSED PROFESSIONAL ENGINEER

1-26-2024

PREPARED FOR:

Hoffman Falls Wind LLC

90 State Street, Suite 700
Albany, NY 12207

REVISIONS:

#	DATE	COMMENT	BY	CHK	APR
A	09/08/2023	30% ELECTRICAL DESIGN	JON	GVH	DNS
B	01/26/2024	60% ELECTRICAL DESIGN	JON	GVH	DNS

Hoffman Falls Wind Project

Madison County, New York

Fiber Splice Box

ISSUE FOR PERMIT

DATE: 01/26/2024

SHEET: E6401

REV: B

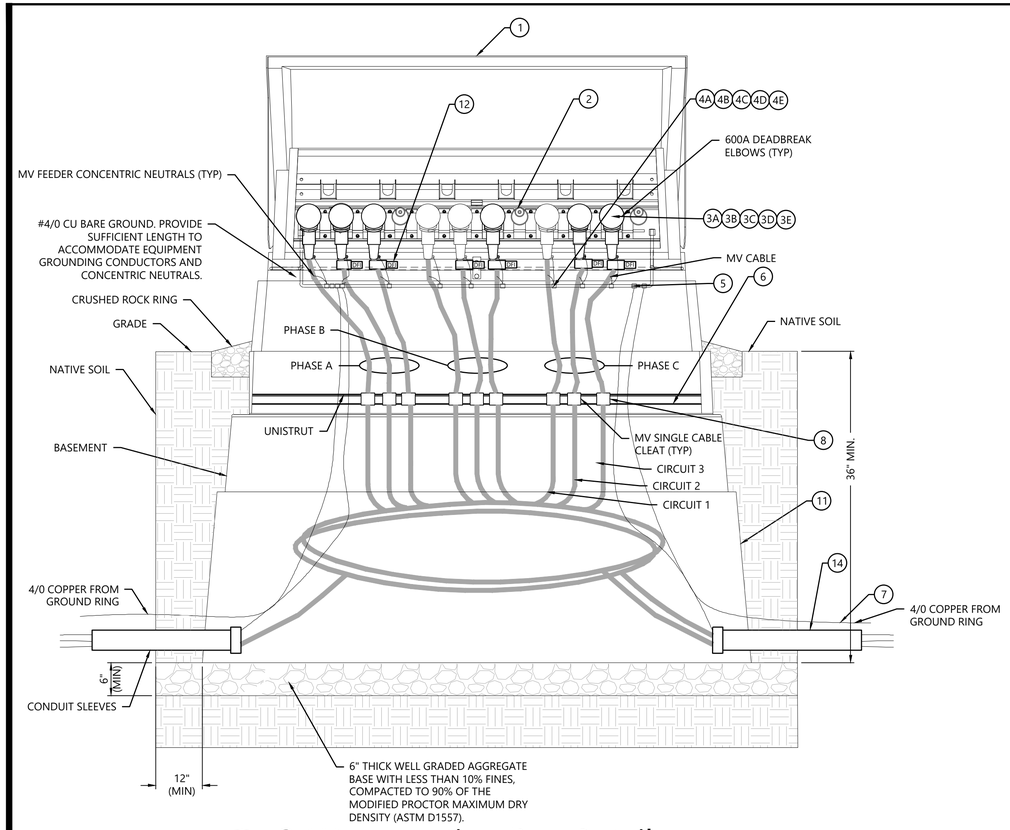

1 3-Way Junction Box Detail
NTS

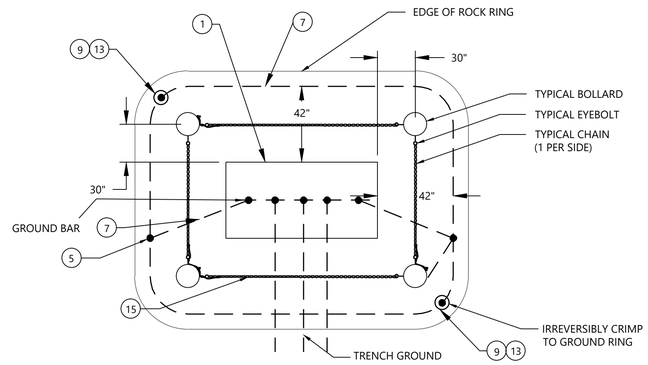

2 Grounding & Bollard Detail
NTS

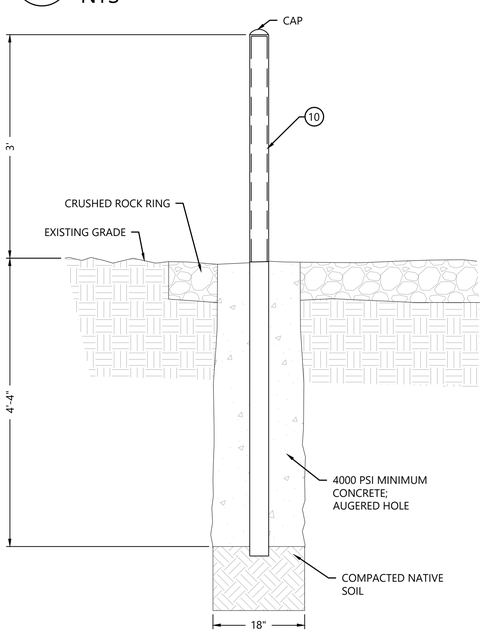

3 Bollard (Guard Post) Detail
NTS

NOTES:

1. JUNCTION BOX GROUND RING TO BE 4/0 AWG BARE CU, 18" DEEP AND 42" AWAY FROM ENCLOSURE. PROVIDE (2) TWO GROUND RODS, INSTALL ON OPPOSITE CORNERS OF GROUND RING.
2. CONTRACTOR SHALL SELECT PROPER CABLE BRACKET AND T-BODY SIZE BASED ON CABLE SIZE.
3. ALL CABLES MUST HAVE SUFFICIENT LENGTH TO ENSURE TWO FUTURE TERMINATIONS.
4. WARNING LABEL TO BE SET ON THE FRONT OF CABINET.
5. BOLLARDS ARE TO BE PLACED AT APPROXIMATELY 30 INCHES FROM ALL FOUR EDGES OF JUNCTION BOX.
6. CONDUIT POSITIONING WITHIN BASEMENT TO BE ADJUSTED BY CONTRACTOR AS NEEDED TO SATISFY MINIMUM CONDUCTOR BENDING REQUIREMENTS. IN NO CASE SHALL THE BENDING RADIUS OF THE MEDIUM VOLTAGE CABLE BE LESS THAN 12 TIMES THE CABLE DIAMETER.
7. BOND CONCENTRIC NEUTRAL AND DRAIN WIRE FROM EACH TERMINATION TO GROUND BUS. BOND TRENCH GROUND TO GROUND BUS.
8. REMOVE ALL BURRS AND ROUGH EDGES FROM END OF CONDUITS PRIOR TO PULLING CABLE.
9. CRUSHED ROCK RING LAYER TO BE APPLIED AT SURFACE FOR VEGETATION MANAGEMENT.
10. FIBER HAND HOLE MAY BE INSTALLED WITH TOP AT GRADE, ADJACENT TO JUNCTION BOX. IN SUCH CASES, GROUND RING AND BOLLARD PLACEMENT SHALL BE ADJUSTED AS NECESSARY TO ENCOMPASS HANDHOLE.
11. JUNCTION BOX SHALL NOT BE PLACED DIRECTLY OVER MAIN TRENCH LINE. PLACEMENT SHALL BE OFFSET FROM MAIN TRENCH LINE BY MINIMUM FIVE FEET.
12. FOR 500 KCMIL OR SMALLER CABLE, ESTABLISH SLACK VIA COIL IN THE JUNCTION BOX. FOR CABLE SIZES OVER 500 KCMIL, ESTABLISH SLACK VIA AN S-CURVE.
13. LATCH OF JUNCTION BOX MUST BE AT LEAST 6" ABOVE ROCK.
14. TWO GROUND CLAMPS PER GROUNDED BOLLARD. SPACE AS NEEDED.
15. RUN #2 TINNED COPPER DOWN BOLLARD AND TIE INTO GROUND RING.
16. CABLE CLAMPS FOR USE ON CABLES 500kCMIL AND LARGER.

MATERIALS LIST

ITEM	3-WAY QTY	UOM	DESCRIPTION	MANUF. (OR EQUAL)	PART# (OR EQUAL)
1	1	EA	SECTIONALIZING CABINET, 3-WAY, 34.5 KV, WITH GROUNDING BAR	HUBBELL	P3783259MDM0512
2	3	EA	JUNCTION, 600A, 34.5 KV, W/MOUNTING HARDWARE	HUBBELL	635J3U
3A	A/R	EA	DEADBREAK ELBOWS, 600A, 34.5 KV, 1250 kCMIL	HUBBELL	635TBTUU4TJ
3B	A/R	EA	DEADBREAK ELBOWS, 600A, 34.5 KV, 1000 kCMIL	HUBBELL	635TBTRU4TJ
3C	A/R	EA	DEADBREAK ELBOWS, 600A, 34.5 KV, 750 kCMIL	HUBBELL	635TBTNU3TJ
3D	A/R	EA	DEADBREAK ELBOWS, 600A, 34.5 KV, 500 kCMIL	HUBBELL	635TBTNU3TJ
3E	A/R	EA	DEADBREAK ELBOWS, 600A, 34.5 KV, 4/0 AWG	HUBBELL	635TBTKU1TJ
4A	A/R	EA	CONNECTOR, COMPRESSION, CONC. WIRE FLAT STRAP TO SECTIONALIZER GROUNDING - 1250 kCMIL	BURNDY	YGHC26C26CN
4B	A/R	EA	CONNECTOR, COMPRESSION, CONC. WIRE FLAT STRAP TO SECTIONALIZER GROUNDING - 1000 kCMIL	BURNDY	YGHC26C26CN
4C	A/R	EA	CONNECTOR, COMPRESSION, CONC. WIRE FLAT STRAP TO SECTIONALIZER GROUNDING - 750 kCMIL	BURNDY	YGHC26C26CN
4D	A/R	EA	CONNECTOR, COMPRESSION, CONC. WIRE FLAT STRAP TO SECTIONALIZER GROUNDING - 500 kCMIL	BURNDY	YGHC26C26CN
4E	A/R	EA	CONNECTOR, COMPRESSION, CONC. WIRE FLAT STRAP TO SECTIONALIZER GROUNDING - 4/0 AEG	BURNDY	YGHC26C26CN
5	7	EA	CONNECTOR, COMPRESSION, TRENCH GND (7#8 CCS) TO SECTIONALIZER GROUNDING	BURNDY	YGHC29C29
6	A/R	EA	UNISTRUT, 1-5/8"	UNISTRUT	P1000
7	75	FT	CONDUCTOR, BARE COPPER STR, 4/0 AWG	ALANWIRE	
8	A/R	EA	CABLE CLAMPS		
9	2	EA	CONNECTOR, COMPRESSION, 3/4" COPPER CLAD GROUND ROD TO 4/0 AWG CU	BURNDY	YGHC29C34
10	4	EA	4" X 88" BOLLARDS ARE CONCRETE FILLED WITH STEEL REINFORCING. INCLUDES YELLOW POLYETHYLENE PLASTIC SLEEVE	CONCAST	8005Y-4F
11	4	EA	SECTIONALIZING CABINET GROUND SLEEVE, 36"	HUBBELL	E0A4896503
12	6	EA	DIRECTIONAL FAULT INDICATOR	SEL	3TPR31200IRW
13	2	EA	GROUND ROD COPPER CLAD STEEL 3/4" X 10'	CARLON	59618-010
14	A/R	EA	8" ADS SINGLE WALL PIPE ONE PER CIRCUIT	ADS	
15	120 - 180	FT	SAFETY CHAIN - PLASTIC TO GO BETWEEN BOLLARDS	CONCAST	8007

Westwood Surveying & Engineering
Phone (952) 937-5150
Fax (952) 937-5822
Toll Free (888) 937-5150
12701 Whitewater Drive, Suite #300
Minnetonka, MN 55343
ww-pc.com
Westwood Surveying and Engineering, P.C.

STATE OF NEW YORK · ANDREW N. SABO · 099489 · LICENSED PROFESSIONAL ENGINEER

1-26-2024

PREPARED FOR:

Hoffman Falls Wind LLC

90 State Street, Suite 700
Albany, NY 12207

REVISIONS:

#	DATE	COMMENT	BY	CHK	APR
A	09/08/2023	30% ELECTRICAL DESIGN	JON	GVH	DNS
B	01/26/2024	60% ELECTRICAL DESIGN	JON	GVH	DNS

Hoffman Falls Wind Project
Madison County, New York

Sectionalizer Cabinet

ISSUE FOR PERMIT

DATE: 01/26/2024

SHEET: E7000

REV: B

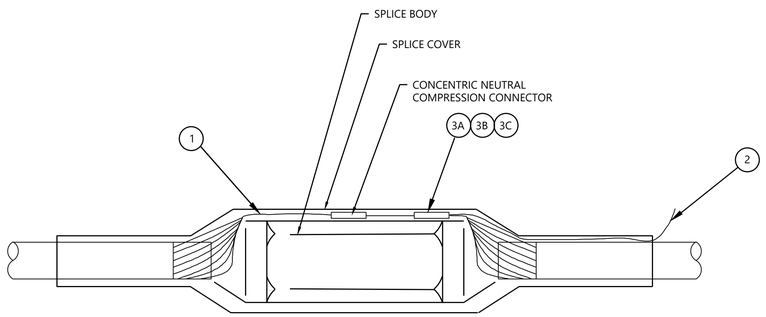

1 Splice Detail

NTS

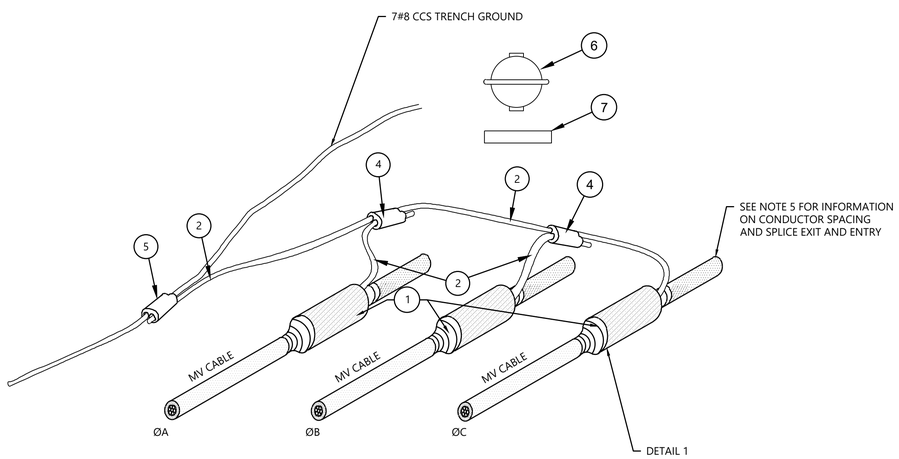

2 Splice Arrangement Detail

NTS

NOTES:

1. SPLICE KIT INCLUDES SPLICE BODY, SPLICE COVER AND COMPRESSION CONNECTOR.
2. PERFORM ALL SPLICES USING MANUFACTURER'S INSTRUCTIONS.
3. PLACE LOCATABLE MARKER BALL ABOVE SPLICE AT 24" DEPTH.
4. SPLICE LOCATION TO BE COMPACTED PER GENERAL TRENCH COMPACTION SPEC.
5. CABLES TO BE LAID FLAT WITH 9" SEPARATION AT SPLICE. CABLE SLACK TO BE CREATED IN S CURVES ON BOTH SIDES OF SPLICE BEFORE RETURNING CABLE TO TREFOIL ARRANGEMENT.
6. FIBER OPTIC INNER DUCT SHALL BE PLACED ADJACENT TO SPLICE.
7. ALL SPLICES SHALL BE GPS LOCATED AND BALL-MARKER IDS TO BE PROVIDED FOR EACH LOCATION FOR INCLUSION IN RECORD DRAWINGS.
8. REFERENCE VENDORS AND PART NUMBERS ARE SHOWN. EQUIVALENT PARTS FROM OTHER VENDORS MAY BE SUBMITTED FOR APPROVAL.

ITEM	QTY	UOM	DESCRIPTION	MANUF. OR EQUAL	PART #
1A	3	EA	SPLICE KIT, CABLE, 1/0 AWG, 35 KV	TE CONNECTIVITY	CSJ-SR-3513M5
1B	3	EA	SPLICE KIT, CABLE, 4/0 AWG, 35 KV	TE CONNECTIVITY	CSJ-SR-3513M5
1C	3	EA	SPLICE KIT, CABLE, 500 KCMIL, 35 KV	TE CONNECTIVITY	CSJ-SR-3514M8
1D	3	EA	SPLICE KIT, CABLE, 750 KCMIL, 35 KV	TE CONNECTIVITY	CSJ-SR-3514M8
1E	3	EA	SPLICE KIT, CABLE, 1000 KCMIL, 35 KV	TE CONNECTIVITY	CSJ-SR-3514M9
1F	3	EA	SPLICE KIT, CABLE, 1250 KCMIL, 35 KV	TE CONNECTIVITY	CSJ-SR-3514M10
2	20	FT	CONDUCTOR, 2 AWG, SOLID, CU, BARE	SOUTHWIRE	
3A	3	EA	COMPRESSION CONNECTOR, CN TO CN - 1250 KCMIL	BURNDY	YGHC26C26CN
3B	3	EA	COMPRESSION CONNECTOR, CN TO CN - 1000 KCMIL	BURNDY	YGHC26C26CN
3C	3	EA	COMPRESSION CONNECTOR, CN TO CN - 750 KCMIL	BURNDY	YGHC26C26CN
3D	3	EA	COMPRESSION CONNECTOR, CN TO CN - 500 KCMIL	BURNDY	YGHC26C26CN
3E	3	EA	COMPRESSION CONNECTOR, CN TO CN - 4/0 AWG	BURNDY	YGHC26C26CN
4	2	EA	COMPRESSION CONNECTOR, #2 AWG CU TO #2 AWG CU	BURNDY	YGHC2C2CN
5	1	EA	COMPRESSION CONNECTOR, #2 AWG CU TO 7#8 CCS	BURNDY	YGHC29C26
6	1	EA	EMS MARKER BALL	3M	1401-XR

Westwood Surveying & Engineering
Phone (952) 937-5150
Fax (952) 937-5822
Toll Free (888) 937-5150
12701 Whitewater Drive, Suite #300
Minnetonka, MN 55343
ww-pc.com
Westwood Surveying and Engineering, P.C.

STATE OF NEW YORK · ANDREW N. SABO · 099489 · LICENSED PROFESSIONAL ENGINEER

1-26-2024

PREPARED FOR:

Hoffman Falls Wind LLC

90 State Street, Suite 700
Albany, NY 12207

REVISIONS:

#	DATE	COMMENT	BY	CHK	APR
A	09/08/2023	30% ELECTRICAL DESIGN	JON	GVH	DNS
B	01/26/2024	60% ELECTRICAL DESIGN	JON	GVH	DNS

Hoffman Falls Wind Project

Madison County, New York

Medium Voltage Splice

ISSUE FOR PERMIT

DATE: 01/26/2024

SHEET: E7001

REV: B

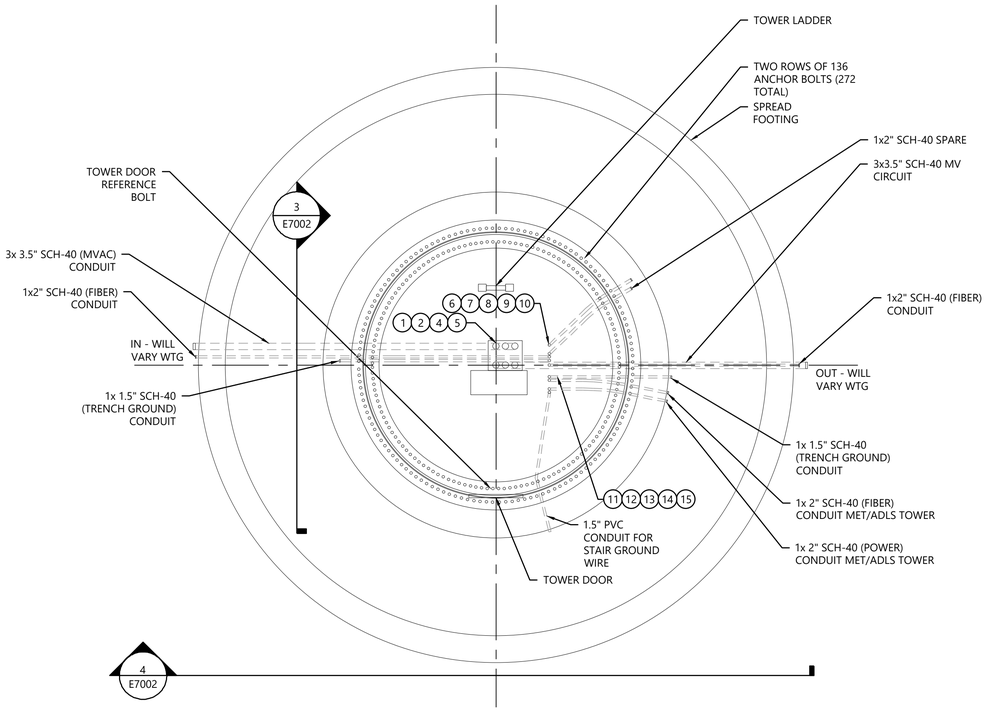

1 Tower Foundation- Top Conduit View

NTS

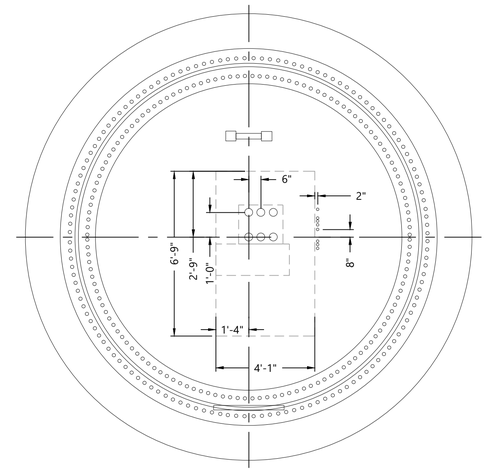

2 Turbine Conduit Entry Detail

NTS

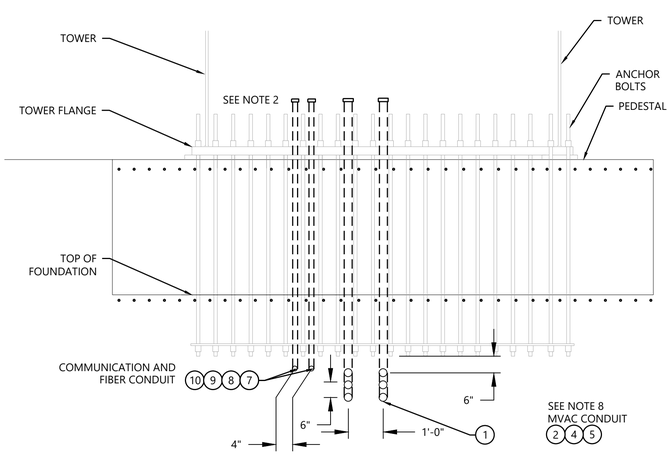

3 Pedestal Conduit Section View

NTS

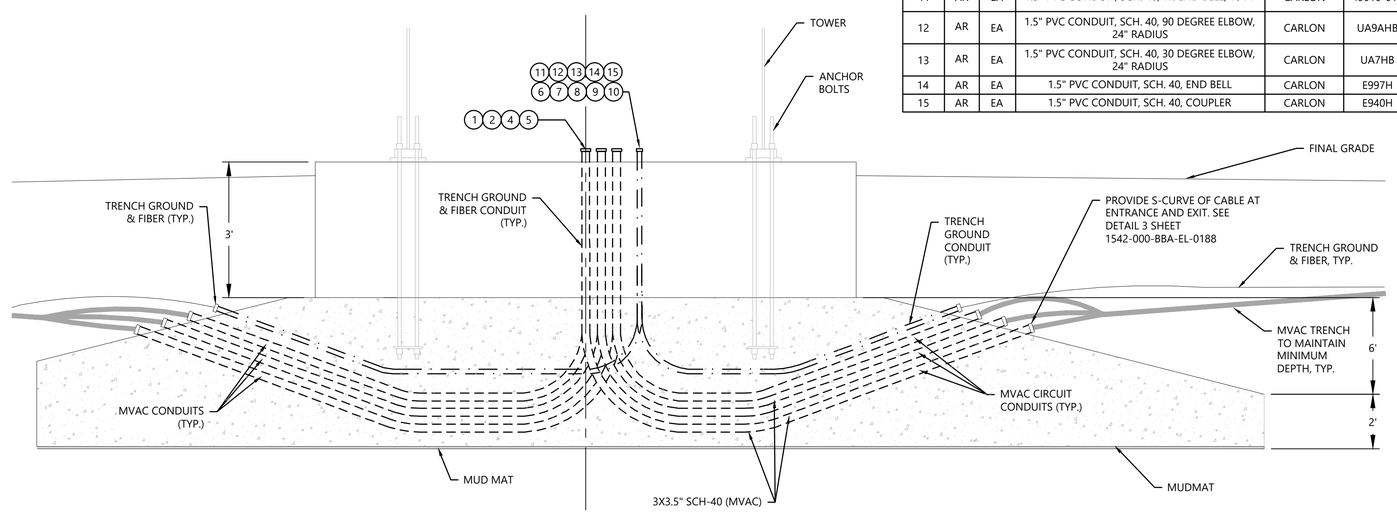

4 Tower Foundation - Side Conduit View

NTS

NOTES:

1. PEDESTAL DESIGN IS SHOWN FOR PERMIT REFERENCE ONLY AND WILL BE UPDATED ONCE TURBINE FOUNDATIONS HAVE BEEN DESIGNED BY OTHERS.
2. REFER TO TURBINE MANUFACTURER INSTALLATION MANUAL FOR ADDITIONAL DETAILS.
3. CONDUITS TO BE FIELD ROUTED THROUGH REBAR INTO CONDUIT INSTALLED AREA. CONDUITS SHALL EXTEND 6" ABOVE THE PEDESTAL FLOOR, AND WILL BE FINISHED WITH BELL-ENDS TO ENSURE CABLES ARE NOT DAMAGED DURING THE PULL.
4. CONTRACTOR SHALL USE A SEALANT TO SEAL CONDUIT. CAP CONDUIT DURING CONSTRUCTION.
5. REBAR SHALL NOT BE PLACED BETWEEN POWER CONDUITS. SEE FOUNDATION DESIGN DRAWINGS FOR STRUCTURAL DETAILS RELATED TO CONDUIT PENETRATION.
6. EXACT LOCATION OF CONDUIT STUB-OUTS INSIDE THE TOWER SHALL BE COORDINATED WITH TURBINE VENDOR TO MATCH PLACEMENT OF SWITCHGEAR, GROUNDING BAR, AND FIBER TERMINAL LOCATION.
7. CONTRACTOR SHALL OBSERVE CABLE BENDING RADIUS REQUIREMENTS.
8. CONDUITS FOR CABLES CLOSEST TO SUBSTATION MUST BE INSTALLED CLOSEST TO THE SWITCHGEAR BUSHINGS.
9. CONTRACTOR TO VERIFY CABLE PHASE SEQUENCE IN RELATION TO SWITCHGEAR PHASE SEQUENCE BEFORE INSTALLATION INTO CONDUIT.
10. DIRECTION OF CONDUIT ENTRANCE AND EXIT IS REPRESENTATIVE. CONTRACTOR MAY ADJUST POSITION OF CONDUITS AS DICTATED BY MEDIUM VOLTAGE CABLE TRENCHING PLAN.
11. MET TOWER FIBER CONDUIT AND MET TOWER POWER CONDUIT REQUIRED AT T-15 AND T-7. ADD MATERIALS ACCORDINGLY.
12. SEE DETAIL 3 FOR CABLES ENTERING AND LEAVING THE FOUNDATION.
13. SEE FOUNDATION DRAWINGS FOR FOUNDATION INFORMATION AND DIMENSIONS.
14. REFERENCE VENDORS AND PART #'S ARE SHOWN. EQUIVALENT PARTS FROM OTHER VENDORS MAY BE SUBMITTED FOR APPROVAL

MATERIALS LIST

ITEM	QTY	UOM	DESCRIPTION	MANUF. OR EQUAL	PART #
1	AR	EA	3.5" PVC CONDUIT, SCH. 40, W. END BELL, 10 FT	CARLON	49014-010
2	AR	EA	3.5" PVC CONDUIT, SCH. 40, 90 DEGREE ELBOW, 48" RADIUS	CARLON	UA9HM
3	AR	EA	3.5" PVC CONDUIT, SCH. 40, 30 DEGREE ELBOW, 48" RADIUS	CARLON	UA6HM
4	AR	EA	3.5" PVC CONDUIT, SCH. 40, END BELL	CARLON	E997M
5	AR	EA	3.5" PVC CONDUIT, SCH. 40, COUPLER	CARLON	E940M
6	AR	EA	2" PVC CONDUIT, SCH. 40, W. END BELL, 10 FT	CARLON	49011-010
7	AR	EA	2" PVC CONDUIT, SCH. 40, 90 DEGREE ELBOW, 24" RADIUS	CARLON	UA9JB
8	AR	EA	2" PVC CONDUIT, SCH. 40, 30 DEGREE ELBOW, 24" RADIUS	CARLON	UA7JB
9	AR	EA	2" PVC CONDUIT, SCH. 40, END BELL	CARLON	E997J
10	AR	EA	2" PVC CONDUIT, SCH. 40, COUPLER	CARLON	E940J
11	AR	EA	1.5" PVC CONDUIT, SCH. 40, W. END BELL, 10 FT	CARLON	49010-010
12	AR	EA	1.5" PVC CONDUIT, SCH. 40, 90 DEGREE ELBOW, 24" RADIUS	CARLON	UA9AHB
13	AR	EA	1.5" PVC CONDUIT, SCH. 40, 30 DEGREE ELBOW, 24" RADIUS	CARLON	UA7HB
14	AR	EA	1.5" PVC CONDUIT, SCH. 40, END BELL	CARLON	E997H
15	AR	EA	1.5" PVC CONDUIT, SCH. 40, COUPLER	CARLON	E940H

Westwood Surveying & Engineering

Phone (952) 937-5150
Fax (952) 937-5822
Toll Free (888) 937-5150

12701 Whitewater Drive, Suite #300
Minnetonka, MN 55343
ww-pc.com

Westwood Surveying and Engineering, P.C.

STATE OF NEW YORK · ANDREW N. SABO · 099489 · LICENSED PROFESSIONAL ENGINEER

1-26-2024

PREPARED FOR:

Hoffman Falls Wind LLC

90 State Street, Suite 700
Albany, NY 12207

REVISIONS:

#	DATE	COMMENT	BY	CHK	APR
A	09/08/2023	30% ELECTRICAL DESIGN	JON	GVH	DNS
B	01/26/2024	60% ELECTRICAL DESIGN	JON	GVH	DNS

Hoffman Falls Wind Project

Madison County, New York

Foundation Conduit Details

ISSUE FOR PERMIT

DATE: 01/26/2024

SHEET: E7002

REV: B

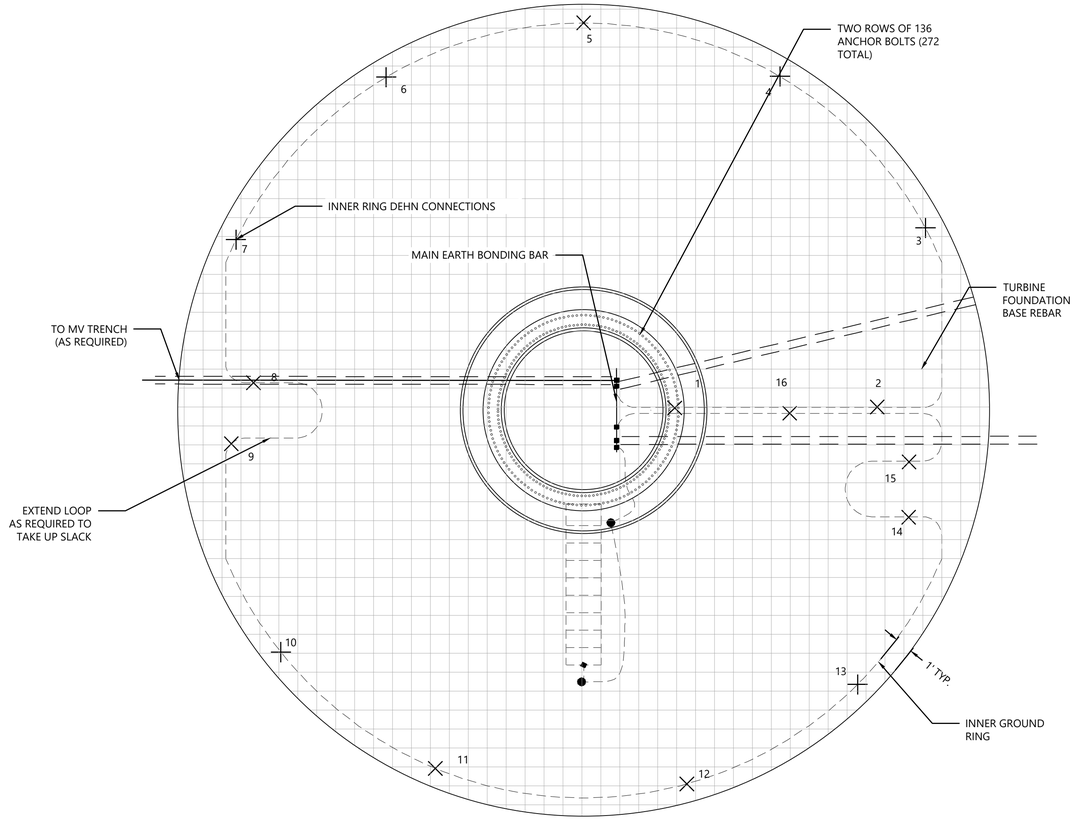

1 Foundation With Ground Conductor Installed
NTS

MATERIALS LIST					
ITEM	QTY	UOM	DESCRIPTION	MAN. OR EQUAL	PART #
1	A/R	FT	CONDUCTOR, 1/0 AWG, STR, CU, BARE		
2	A/R	EA	COMPRESSION CONNECTOR, 1/0 AWG TO 1/0	BURNDY	YGHC2626
3	A/R	EA	DEHN CONNECTION TERMINAL	DEHN	
4	A/R	EA	LUG, 1-HOLE, 1/0 AWG	BURNDY	YA25TC38

LUG MATERIALS LIST			
ITEM	QTY	UOM	DESCRIPTION
1	A/R	EA	M10 NUT
2	A/R	EA	M10 BOLT
3	A/R	EA	SPRING WASHER
4	A/R	EA	FENDER WASHER
5	A/R	EA	1 HOLE, 1/0 CU LUG

NOTES:

1. PEDESTAL DESIGN IS SHOWN FOR PERMIT REFERENCE ONLY AND WILL BE UPDATED ONCE TURBINE FOUNDATIONS HAVE BEEN DESIGNED BY OTHERS.
2. GROUND CONDUCTOR WITHIN THE FOUNDATION SHALL BE INSTALLED ALONG THE INNER SIDE OF THE EDGE OF THE REINFORCEMENT STEEL AND SHALL BE BONDED TO THE REBAR CAGE WITH GROUND CLAMPS AT THE 16 LOCATIONS IDENTIFIED. AT ALL OTHER LOCATIONS, GROUND CONDUCTOR SHALL BE SECURED TO THE REAR CAGE WITH STEEL WIRE TIES AT EVERY CROSSING, WHICH SHALL NOT EXCEED SIX INCHES.
3. REBAR GROUND CLAMPS SHALL BE LISTED FOR EMBEDMENT IN CONCRETE.
4. THE CONNECTION TERMINALS ARE MARKED AND NUMBERED 1 TO 16. STARTED AT ONE END, INSTALL THE CONNECTION TERMINAL EVERY 16.5 FEET ALONG THE GROUNDING CONDUCTOR. INSTALL THE CONNECTION TERMINALS NUMBERED 1 TO 15 FIRST.
5. CONNECTION TERMINAL NUMBER 16 MUST BE INSTALLED ALONG THE UPPER LAYER OF THE REINFORCEMENT STEEL.
6. ANY EXCESS GROUNDING SHALL NOT BE CUT OFF. IT MUST BE DISTRIBUTED INSIDE THE STEEL REINFORCEMENT SHOWN IN THE DRAWING AS SLACK AND TIED TO ALL STEEL REINFORCEMENT CROSSINGS.
7. TWO TRENCH GROUND CONDUCTORS SHALL ENTER THE TURBINE, BOTH TERMINATED ONTO MAIN GROUNDING BAR.GROUNDING CONDUCTORS FROM DOWN-TOWER CABLE NOT SHOWN FOR CLARITY. GROUNDS TO BE CONNECTED TO THE MAIN GROUNDING BUS BAR PER WORK INSTRUCTIONS.
8. IF 90 DEGREES OR GREATER SEPARATION OF INCOMING AND OUTGOING MV/TRENCH GROUND CONDUITS CANNOT BE MAINTAINED, A SEPARATE 80 M 7#7 CU EARTHING WIRE EXITING AT MINIMUM 90 DEGREES FROM ONE OF THE MV TRENCH GROUNDS MUST BE INSTALLED AND CONNECTED TO MAIN EARTHING BAR. THIS ADDITIONAL EARTHING WIRE ALSO REQUIRED FOR END OF LINE TURBINES.
9. MAIN GROUND BAR TO BE LOCATED AT BASE FRAME OF SWITCHGEAR, PER TURBINE DOCUMENTS.
10. GROUND CONDUCTOR WITHIN TOWER BASEMENT SHALL BE BONDED TO BOTH THE MAIN GROUND BUS BAR (AT SWITCHGEAR BASE) AND TRENCH GROUND CONDUCTOR(S), AS SHOWN.
11. GROUND LOOP RESISTANCE TO REMOTE EARTH TO BE MEASURED USING A THREE POINT "FALL OF POTENTIAL" METHOD AT EACH WIND TURBINE LOCATION PRIOR TO INTERCONNECTION OF EARTHING SYSTEM BETWEEN WIND TURBINES. NOTIFY OWNER IF RESULTS ARE MORE THAN FIVE OHMS.
12. ALL FOUNDATION EARTHING MATERIALS ARE PROVIDED BY TURBINE MANUFACTURER, WITH THE EXCEPTION OF THE COMPRESSION FITTINGS.
13. SEE FINAL FOUNDATION DRAWINGS FOR FOUNDATION INFORMATION AND DIMENSIONS.
14. ALL GROUND CONDUCTORS SHALL BE EQUIPPED WITH A HEAT SHRINK SLEEVE WHERE THEY EMERGE FROM CONCRETE.
15. REFERENCE VENDORS AND PART #'S ARE SHOWN. EQUIVALENT PARTS FROM OTHER VENDORS MAY BE SUBMITTED FOR APPROVAL.

LEGEND:

× CONNECTION TERMINALS (16X PER FOUNDATION)

● COMPRESSION LINE CONNECTIONS

▪ COMPRESSION LUG CONNECTIONS

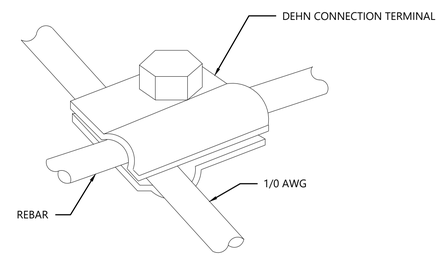

2 Dehn Rebar Connection Terminal
NTS

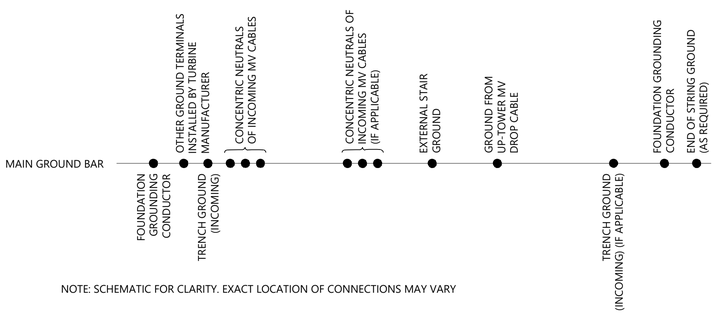

3 Main Ground Bar Connections
NTS

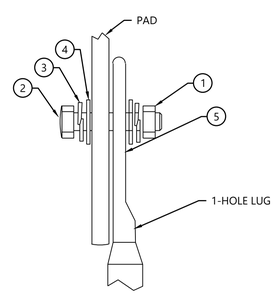

4 Main Ground Lug Detail
NTS

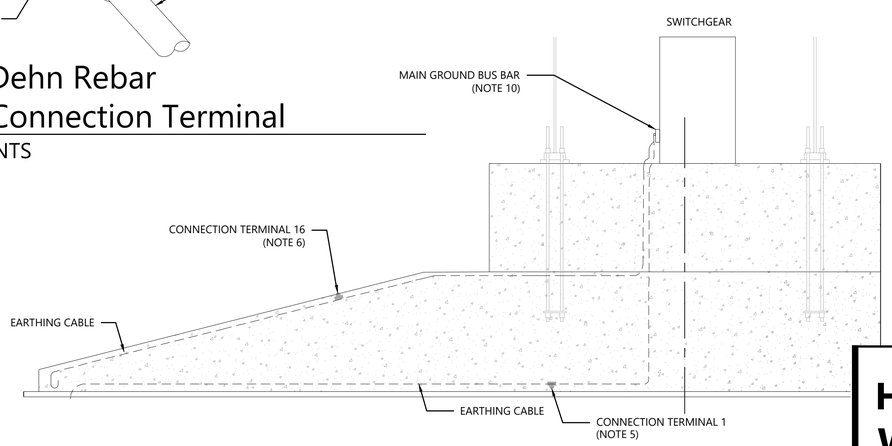

5 Foundation Section View
NTS

Westwood Surveying & Engineering
Phone (952) 937-5150
Fax (952) 937-5822
Toll Free (888) 937-5150
12701 Whitewater Drive, Suite #300
Minnetonka, MN 55343
ww-pc.com
Westwood Surveying and Engineering, P.C.

STATE OF NEW YORK · ANDREW N. SZABO · 099489 · LICENSED PROFESSIONAL ENGINEER

1-26-2024

PREPARED FOR:

Hoffman Falls Wind LLC

90 State Street, Suite 700
Albany, NY 12207

REVISIONS:

#	DATE	COMMENT	BY	CHK	APR
A	09/08/2023	30% ELECTRICAL DESIGN	JON	GVH	DNS
B	01/26/2024	60% ELECTRICAL DESIGN	JON	GVH	DNS

Hoffman Falls Wind Project
Madison County, New York

Foundation Grounding Details

ISSUE FOR PERMIT

DATE: 01/26/2024

SHEET: E7003 REV: B

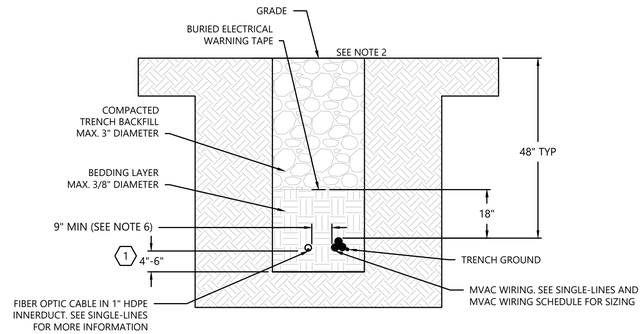

1 MVAC & Fiber Optic Trench

NTS

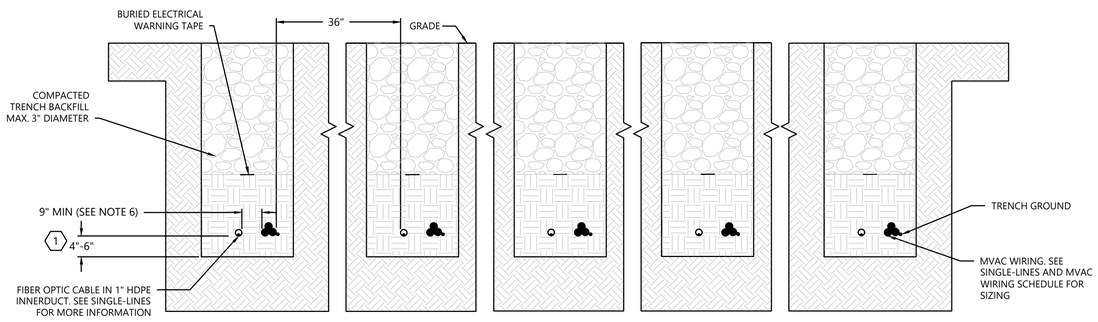

2 MVAC & Fiber Optic Trench - 5 Circuits or Less

NTS

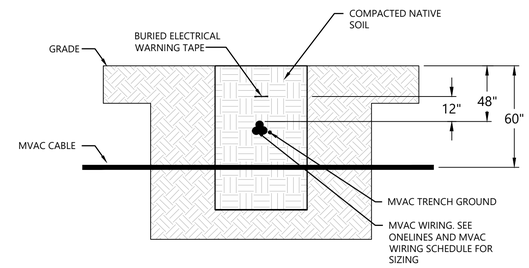

3 Typical MVAC Crossing Detail

NTS

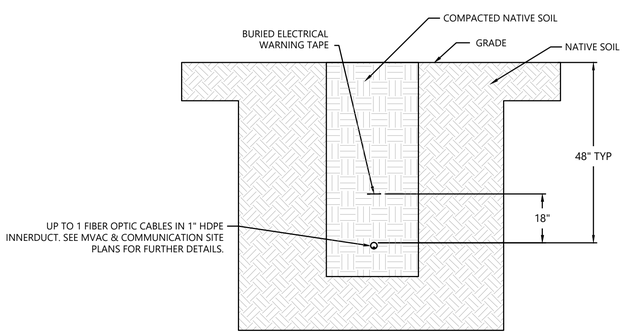

4 Fiber Optic Trench

NTS

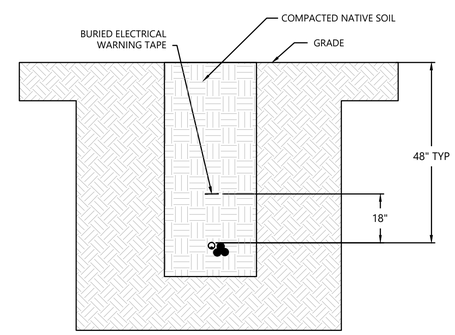

5 LVAC Trench (To MET Tower)

NTS

Table 1 : Cable Trench Backfill Testing Requirements

	Location	Required Test	ASTM Standard	Frequency	Specified Criteria
Trench	Trench Backfill and Bedding	Moisture Density Test (Nuclear Density)	ASTM D-2922	1 test per every 500 LF of trench with 18" of cover over cables/conduit and on each subsequent compacted 12" thick lift	90% of maximum dry density, -2% to +5% of optimum moisture content
		Standard Proctor	ASTM D-698	1 per major soil type	
	Trench Bedding (import only)	Standard Proctor	ASTM D-698	1 per major soil type	Submit results to Westwood for approval
		Sieve Analysis with Hydrometer	ASTM D-422	1 per major soil type	
		Thermal Resistivity Dryout Curve	ASTM D-5334	1 per major soil type	

NOTES:

1. BEDDING LAYER IS DEFINED AS THE MATERIAL THAT SPANS FROM 4"-6" BELOW BOTTOM OF CABLE TO 18" ABOVE TOP OF CABLE. IN ORDER TO ENSURE PROTECTION OF THE CABLES, THE MATERIAL INSTALLED IN THE BEDDING LAYER IS REQUIRED TO BE 3/8" DIAMETER OR LESS. SEE DETAIL 5 FOR REFERENCE.
2. DESIGN BASIS THERMAL RESISTIVITY FOR NATIVE SOIL COMPACTED TO 90%: 120 C CM/W
3. COORDINATE WITH SHEETS E1100-E1115 FOR MVAC CABLE ROUTING. REFER TO MVAC WIRING SCHEDULES FOR CABLE QUANTITIES AND SIZES.
4. COORDINATE WITH SHEETS E6000 FOR FIBER OPTIC CABLE ROUTING.
5. BASED ON AMBIENT SOIL TEMPERATURE, THERMAL RESISTIVITY AND PERCENT MOISTURE RETENTION AS DETERMINED BY GEOTECHNICAL REPORT AND NOTED IN AMPACITY REPORT.
6. MEDIUM VOLTAGE TRENCHES MAY CONTAIN MULTIPLE FIBER OPTIC CABLES.
7. CONTRACTOR TO VERIFY WITH LOCAL AUTHORITIES FOR ANY SPECIFIC BORING CLEARANCES AND REVIEW ANY PROPOSED CHANGES WITH THE ENGINEER OF RECORD BEFORE DOING THE WORK.
8. CABLE INSTALLATION THROUGH TRENCHING METHOD DEPICTED.

EARTHWORK:

1. GENERAL
   a. THIS SECTION DESCRIBES WORK RELATED TO EARTHWORK FOR COLLECTION TRENCHING.
   b. EARTHWORK & BACKFILL WITHIN 5 FEET OF THE WTG FOUNDATION SHALL BE COMPACTED PER THE STRUCTURAL FOUNDATION BACKFILL REQUIREMENTS PROVIDED BY OTHERS
   c. EARTHWORK & BACKFILL WITHIN AN AREA EXTENDING 5 FEET FROM THE EDGE OF ROAD SHALL BE COMPACTED TO THE CIVIL PLAN SPECIFICATIONS. SEE WESTWOOD CIVIL PLAN SHEETS FOR ADDITIONAL DETAILS.
2. SUBMITTALS
   a. THE FOLLOWING MATERIAL SUBMITTALS ARE REQUIRED FOR REVIEW BY THE ENGINEER OF RECORD (EOR) PER SPECIFIC PRODUCT AND PRE-PLACEMENT:
      a.1. ON-SITE BORROW SOURCE FOR BEDDING AND BACKFILL MATERIAL
      a.2. IMPORTED BEDDING AND BACKFILL MATERIAL
3. MATERIALS
   a. TRENCH BEDDING
      a.1. BEDDING TO CONSIST OF NATIVE SOIL OR APPROVED IMPORT MATERIAL THAT IS FREE OF LARGE SHARP ROCKS, DEBRIS, ORGANIC MATERIALS, OR OTHER MATERIAL CAPABLE OF DAMAGING CABLES.
      a.2. BEDDING MATERIAL SHALL BE 3/8 INCH DIAMETER OR LESS. SEE DETAIL 5 FOR REFERENCE.
   b. TRENCH BACKFILL
      b.1. BACKFILL TO TO CONSIST OF NATIVE SOIL OR IMPORT MATERIAL THAT IS FREE OF LARGE SHARP ROCKS, DEBRIS, ORGANIC MATERIALS, OR OTHER MATERIAL CAPABLE OF DAMAGING CABLES.
      b.2. BACKFILL MATERIAL SHALL BE SCREENED TO REMOVE PARTICLES LARGER THAN 3 INCHES.
4. CONSTRUCTION
   a. GENERAL TRENCHING
      a.1. ONLY ONE TRENCH SHALL BE OPEN AT A TIME TO ENSURE SIDE SLOPE STABILITY.
      a.2. SEE DETAILS 1-5 FOR TRENCH DEPTH SPECIFICATIONS. BOTTOM OF TRENCH PRIOR TO BEDDING PLACEMENT SHALL CONSIST OF NON-NATIVE COMPACTED MATERIAL.
   b. TRENCH BEDDING AND BACKFILL
      b.1. FOLLOWING GENERAL TRENCHING, 4-6 INCHES OF BEDDING MATERIAL SHALL BE PLACED AT THE BOTTOM OF THE TRENCH.
      b.2. PER DETAILS 1-3, MVAC CABLE AND TRENCH GROUND SHALL BE PLACED ON THE BEDDING.
      b.3. FOLLOWING MVAC CABLE AND FIBER PLACEMENT, 18 INCHES OF BEDDING MATERIAL SHALL BE PLACED ABOVE THE CABLES AND COMPACTED IN LIFTS WITH MAXIMUM UN-COMPACTED THICKNESS OF 8 INCHES.
      b.4. FOLLOWING THE FINAL BEDDING PLACEMENT AND COMPACTION, TRENCH BACKFILL MATERIAL SHALL BE PLACED OVER THE WARNING TAPE. FINAL BACKFILL MATERIAL SHALL BE COMPACTED TO ELIMINATE VOIDS WITH ADDITIONAL BACKFILL TO ALLOW FOR SETTLING.

KEYNOTES:

1. IF VISUAL INSPECTION INDICATES THAT NO GRAVEL LARGER THAN 3/8 INCH IS PRESENT AT THE LEVEL OF THE BOTTOM OF THE CABLE, CONSTRUCTION ITEM 4.b.1 IS NOT REQUIRED.

Westwood Surveying & Engineering
Phone (952) 937-5150
Fax (952) 937-5822
Toll Free (888) 937-5150
12701 Whitewater Drive, Suite #300
Minnetonka, MN 55343
ww-pc.com
Westwood Surveying and Engineering, P.C.

STATE OF NEW YORK · ANDREW N. SABO · 099489 · LICENSED PROFESSIONAL ENGINEER

1-26-2024

PREPARED FOR:

Hoffman Falls Wind LLC

90 State Street, Suite 700
Albany, NY 12207

REVISIONS:

#	DATE	COMMENT	BY	CHK	APR
A	09/08/2023	30% ELECTRICAL DESIGN	JON	GVH	DNS
B	01/26/2024	60% ELECTRICAL DESIGN	JON	GVH	DNS

Hoffman Falls Wind Project

Madison County, New York

Trench Details

ISSUE FOR PERMIT

DATE: 01/26/2024

SHEET: E7600

REV: B

NOTES:

1. CABLE MARKERS TO BE PLACED AT TOP OF SLOPES.
2. DEPTH OF BORE TO BE 72" MINIMUM BELOW WETLAND OR STREAM, OR BELOW HARDPAN BOTTOM OF ROAD SHOULDER.
3. CENTER-TO-CENTER SPACING OF PARALLEL BORES TO BE 10' MINIMUM AT A MAXIMUM DEPTH OF 11'.
4. BORE LENGTH TO BE ENTIRE RIGHT-OF-WAY OR BOUNDARY OF FEATURE.
5. SLOPE OF BORE INTO AND OUT OF HORIZONTAL SECTION TO BE 1:3 SLOPE MINIMUM.
6. SEE E7700 FOR SITE BORE SCHEDULE.

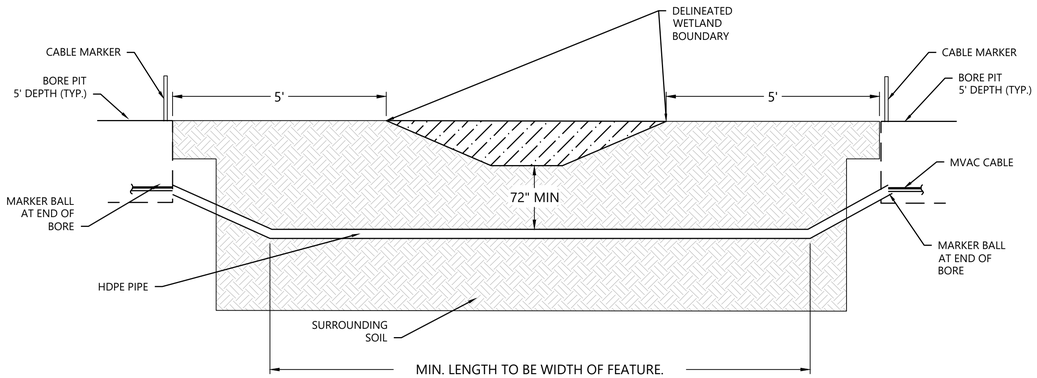

1 Typical MVAC Crossing - Wetland Bore Section View

NTS

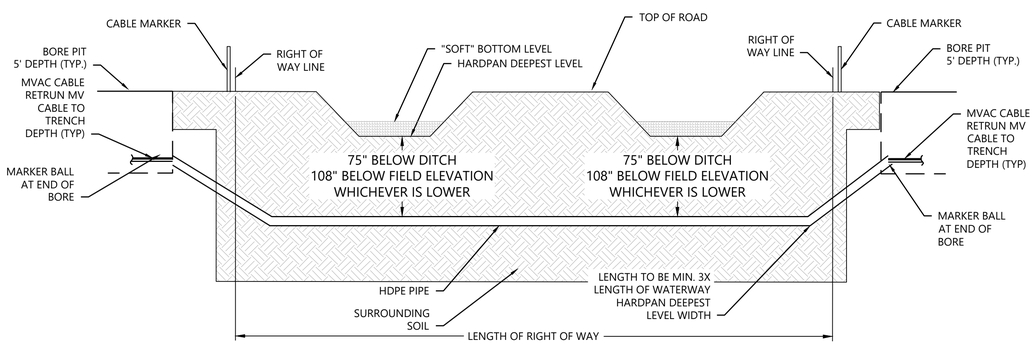

2 Road Crossing Detail Bore Section View

NTS

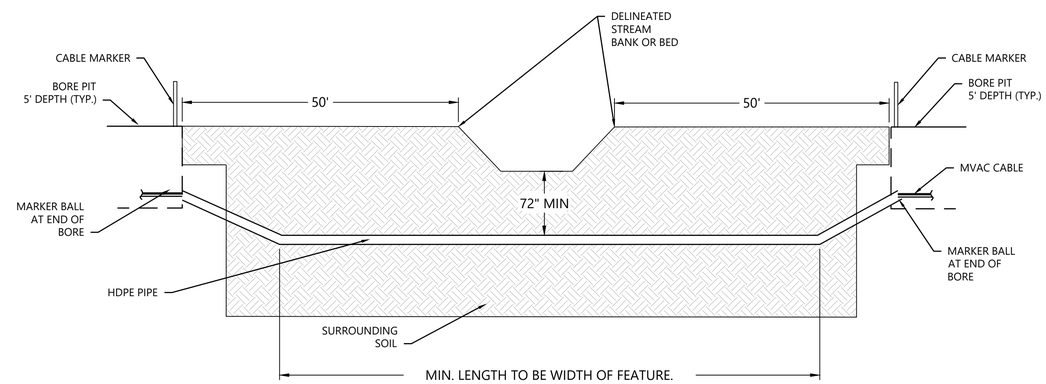

3 Typical MVAC Crossing - Stream Bore Section View

NTS

Westwood Surveying & Engineering

Phone (952) 937-5150
Fax (952) 937-5822
Toll Free (888) 937-5150

12701 Whitewater Drive, Suite #300
Minnetonka, MN 55343
ww-pc.com

Westwood Surveying and Engineering, P.C.

STATE OF NEW YORK · ANDREW N. SZABO · 099489 · LICENSED PROFESSIONAL ENGINEER

1-26-2024

PREPARED FOR:

Hoffman Falls Wind LLC

90 State Street, Suite 700
Albany, NY 12207

REVISIONS:

#	DATE	COMMENT	BY	CHK	APR
A	09/08/2023	30% ELECTRICAL DESIGN	JON	GVH	DNS
B	01/26/2024	60% ELECTRICAL DESIGN	JON	GVH	DNS

Hoffman Falls Wind Project

Madison County, New York

Bore Details

ISSUE FOR PERMIT

DATE: 01/26/2024

SHEET: E7601 REV: B

NOTES:

1. CROSSED FEATURE LENGTH COLUMN REPRESENTS POINT-TO-POINT DISTANCE OF FEATURES SHOWN ON MVAC SITE PLAN DRAWINGS THAT ARE CROSSED BY A BORE.
2. BORE LENGTH COLUMN REPRESENTS THE HORIZONTAL LENGTH OF THE BORE SHOWN IN THE MVAC SITE PLAN DRAWINGS, NOT INCLUDING THE 20' BORE PITS ON EITHER SIDE OF THE BORE.

Hoffman Falls Wind - Crossing Schedule

Crossing ID	Circuit	Bore Type	Crossing Conduit Size (in)	Conductor Location Code	Cable Size	Crossed Feature Length (ft)	Bore Length (ft)	Boring Coordinates (Substation Side of Bore) [Northing, Easting]	Boring Coordinates (Non-Substation Side of Bore) [Northing, Easting]
DB1-1	UMV-1	Road Crossing	8	F1.MV-SUB-JB-1A	1250 KCMIL	66	72	1043499.1721, 1043499.1721	1043511.8353, 1081385.291
DB1-2	UMV-1	Road Crossing	8	F1.MV-JB-1A-JB-1B	1000 KCMIL	116	221	1042394.8283, 1075197.8514	1042365.6172, 1074978.4847
DB1-3	UMV-1	Wetland Crossing	8	F1.MV-JB-1A-JB-1B	1000 KCMIL	563	616	1042359.9177, 1074935.6834	1042339.032, 1074320.1479
DB1-4	UMV-1	Wetland Crossing	8	F1.MV-JB-1A-JB-1B	1000 KCMIL	89	160	1042268.477, 1074216.5127	1042163.5659, 1074095.9726
DB1-5	UMV-1	Road Crossing	8	F1.MV-JB-1A-JB-1B	1000 KCMIL	61	66	1042126.2115, 1073815.9138	1042115.8101, 1073750.5989
DB1-6	UMV-1	Road Crossing	8	F1.MV-JB-1A-JB-1B	1000 KCMIL	67	66	1042041.6174, 1073739.0074	1041976.0811, 1073739.1579
DB1-7	UMV-1	Wetland Crossing	8	F1.MV-JB-1A-JB-1B	1000 KCMIL	11	112	1040910.639, 1073227.897	1040864.9563, 1073125.629
DB1-8	UMV-1	Wetland Crossing	6	F1.MV-JB-1B-T-2	4/0 AWG	103	368	1039038.5923, 1072092.2885	1038696.5121, 1072227.16
DB1-9	UMV-1	Road Crossing	6	F1.MV-JB-1B-T-2	4/0 AWG	65	67	1038646.5736, 1072259.4253	1038615.4417, 1072319.1651
DB2-1	UMV-2	Road Crossing	8	F2.MV-SUB-T-10	1250 KCMIL	66	73	1043469.6019, 1081450.7986	1043482.446, 1081378.9886
DB2-2	UMV-2	Wetland Crossing	8	F2.MV-T-10-JB-2A	1000 KCMIL	10	57	1047579.6692, 1075575.4698	1047636.248, 1075575.3212
DB2-3	UMV-2	Road Crossing	8	F2.MV-T-10-JB-2A	1000 KCMIL	82	117	1048060.1392, 1073613.3316	1048061.2779, 1073495.8644
DB2-4	UMV-2	Wetland Crossing	8	F2.MV-T-10-JB-2A	1000 KCMIL	8	131	1048100.8369, 1073422.3361	1048102.2024, 1073291.4702
DB2-5	UMV-2	Wetland Crossing	8	F2.MV-JB-2A-T-12	500 KCMIL	180	208	1048573.0753, 1072047.108	1048776.3172, 1072004.5697
DB2-6	UMV-2	Wetland Crossing	8	F2.MV-JB-2A-T-12	500 KCMIL	332	371	1049482.061, 1072023.0703	1049848.406, 1072083.0613
DB2-7	UMV-2	Wetland Crossing	6	F2.MV-T-12-JB-2B	4/0 AWG	5	105	1053097.7465, 1072477.183	1053202.6997, 1072478.0796
DB2-8	UMV-2	Road Crossing	6	F2.MV-T-12-JB-2B	4/0 AWG	75	76	1053301.4993, 1072479.5913	1053377.7764, 1072479.7522
DB2-9	UMV-2	Wetland Crossing	6	F2.MV-T-12-JB-2B	4/0 AWG	14	133	1053484.5043, 1072479.4326	1053617.7675, 1072479.0649
DB2-10	UMV-2	Wetland Crossing	6	F2.MV-T-12-JB-2B	4/0 AWG	10	114	1053947.814, 1072478.036	1054061.6678, 1072477.6968
DB2-11	UMV-2	Road Crossing	6	F2.MV-JB-2B-T-24	4/0 AWG	50	69	1058429.412, 1072150.324	1058498.2517, 1072150.8615
DB3-1	UMV-3	Road Crossing	8	F3.MV-SUB-T-15	1250 KCMIL	66	73	1043479.4749, 1081452.3974	1043492.3545, 1081380.6258
DB3-2	UMV-3	Wetland Crossing	8	F3.MV-SUB-T-15	1250 KCMIL	10	57	1047579.7086, 1075590.4697	1047636.288, 1075590.5556
DB3-3	UMV-3	Road Crossing	8	F3.MV-SUB-T-15	1250 KCMIL	64	117	1048070.0968, 1073613.6775	1048071.274, 1073496.2117
DB3-4	UMV-3	Wetland Crossing	8	F3.MV-SUB-T-15	1250 KCMIL	113	131	1048115.7514, 1073422.5315	1048117.6069, 1073291.672
DB3-5	UMV-3	Wetland Crossing	8	F3.MV-SUB-T-15	1250 KCMIL	196	207	1048576.1478, 1072061.7902	1048779.0835, 1072019.316
DB3-6	UMV-3	Wetland Crossing	8	F3.MV-SUB-T-15	1250 KCMIL	338	371	1049479.6803, 1072037.6492	1049845.8715, 1072097.8445
DB3-7	UMV-3	Wetland Crossing	8	F3.MV-SUB-T-15	1250 KCMIL	5	105	1053097.7822, 1072492.1831	1053202.7705, 1072493.0826
DB3-8	UMV-3	Road Crossing	8	F3.MV-SUB-T-15	1250 KCMIL	75	76	1053301.3906, 1072494.4712	1053377.8206, 1072494.7474
DB3-9	UMV-3	Wetland Crossing	8	F3.MV-SUB-T-15	1250 KCMIL	14	133	1053484.5485, 1072494.4277	1053617.5513, 1072494.027
DB3-10	UMV-3	Wetland Crossing	8	F3.MV-SUB-T-15	1250 KCMIL	10	114	1053947.5996, 72492.8686	1054061.4518, 1072492.6395
DB3-11	UMV-3	Road Crossing	8	F3.MV-SUB-T-15	1250 KCMIL	152	325	1060387.9129, 1066362.986	1060799.3823, 1066390.3601
DB3-12	UMV-3	Wetland Crossing	6	F3.MV-T-18-T-16	4/0 AWG	296	362	1062772.0063, 1064237.2664	1062597.637, 1063920.446
DB3-13	UMV-3	Wetland Crossing	6	F3.MV-JB-3A-T-13	4/0 AWG	533	708	1056467.3199, 1067401.4492	1056273.9004, 1066719.9865
DB4-1	UMV-4	Road Crossing	8	F4.MV-SUB-JB-4A	1250 KCMIL	66	72	1043489.316, 1081454.1766	1043502.0381, 1081383.19
DB4-2	UMV-4	Wetland Crossing	8	F4.MV-SUB-JB-4A	1250 KCMIL	10	57	1047579.748, 1075605.4697	1047636.3268, 1075605.3211
DB4-3	UMV-4	Road Crossing	8	F4.MV-SUB-JB-4A	1250 KCMIL	64	117	1048080.1335, 1073614.0262	1048081.2684, 1073496.5589
DB4-4	UMV-4	Wetland Crossing	8	F4.MV-SUB-JB-4A	1250 KCMIL	113	131	1048130.8343, 1073422.7291	1048132.5708, 1073291.4702
DB4-5	UMV-4	Wetland Crossing	8	F4.MV-SUB-JB-4A	1250 KCMIL	200	208	1048579.2207, 1072076.4719	1048782.4629, 1072033.9334
DB4-6	UMV-4	Wetland Crossing	8	F4.MV-SUB-JB-4A	1250 KCMIL	340	371	1049477.3103, 1072052.2098	1049843.4121, 1072112.643
DB4-7	UMV-4	Wetland Crossing	8	F4.MV-SUB-JB-4A	1250 KCMIL	5	105	1053097.8406, 1072507.1462	1053202.9494, 1072508.0874
DB4-8	UMV-4	Road Crossing	8	F4.MV-SUB-JB-4A	1250 KCMIL	75	76	1053301.3775, 1072509.4736	1053377.8075, 1072509.7475
DB4-9	UMV-4	Wetland Crossing	8	F4.MV-SUB-JB-4A	1250 KCMIL	14	133	1053484.5928, 1072509.4275	1053617.5955, 1072508.9926
DB4-10	UMV-4	Wetland Crossing	8	F4.MV-SUB-JB-4A	1250 KCMIL	10	114	1053947.3775, 1072508.0375	1054061.234, 1072507.7053
DB4-11	UMV-4	Road Crossing	8	F4.MV-SUB-JB-4A	1250 KCMIL	137	325	1060387.2614, 1066377.9758	1060798.7308, 1066405.3499
DB4-12	UMV-4	Wetland Crossing	8	F4.MV-SUB-JB-4A	1250 KCMIL	5	100	1064943.5353, 1064144.8469	1065005.2605, 1064066.1703
DB4-13	UMV-4	Road Crossing	8	F4.MV-SUB-JB-4A	1250 KCMIL	65	66	1065643.5658, 1063992.2533	1065706.2598, 1064012.9265
DB4-14	UMV-4	Wetland Crossing	8	F4.MV-SUB-JB-4A	1250 KCMIL	1121	1900	1067223.3789, 1063926.1759	1069123.3812, 1063948.6408
DB4-15	UMV-4	Road Crossing	6	F4.MV-JB-4B-JB-4C	4/0 AWG	66	68	1072224.0563, 1064510.1194	1072291.5853, 1064514.5445
DB5-1	UMV-5	Road Crossing	8	F5.MV-SUB-T-5	1000 KCMIL	66	72	1043499.1721, 1081455.8655	1043511.8353, 1081385.291

Westwood Surveying & Engineering

Phone (952) 937-5150
Fax (952) 937-5822
Toll Free (888) 937-5150
12701 Whitewater Drive, Suite #300
Minnetonka, MN 55343
ww-pc.com

Westwood Surveying and Engineering, P.C.

STATE OF NEW YORK · ANDREW N. SZABO · 099489 · LICENSED PROFESSIONAL ENGINEER

1-26-2024

PREPARED FOR:

Hoffman Falls Wind LLC

90 State Street, Suite 700
Albany, NY 12207

REVISIONS:

#	DATE	COMMENT	BY	CHK	APR
A	09/08/2023	30% ELECTRICAL DESIGN	JON	GVH	DNS
B	01/26/2024	60% ELECTRICAL DESIGN	JON	GVH	DNS

Hoffman Falls Wind Project

Madison County, New York

Crossing Schedule

ISSUE FOR PERMIT

DATE: 01/26/2024

SHEET: E7700

REV: B